HEATER & AIR CONDITIONER

SECTION HA

CONTENTS

AUTO

PRECAUTIONS 3
Supplemental Restraint System (SRS) "AIR BAG" and "SEAT BELT PRE-TENSIONER" 3
Precautions for Working with HFC-134a (R-134a) 3
General Refrigerant Precautions 4
Precautions for Refrigerant Connection 4
Precautions for Servicing Compressor 7
Precautions for Service Equipment 7
Wiring Diagrams and Trouble Diagnoses 9
PREPARATION 10
Special Service Tools 10
HFC-134a (R-134a) Service Tools and Equipment 11
DESCRIPTION 13
Refrigeration System 13
V-6 Variable Displacement Compressor 14
Component Layout 19
Introduction 20
Features 20
Overview of Control System 23
Control Operation 23
Discharge Air Flow 26
System Description 27
TROUBLE DIAGNOSES 29
Component Location 29
Circuit Diagram 31
Wiring Diagram - A/C, A - 32
Auto Amp. Terminals and Reference Value 36
Self-diagnosis 38
How to Perform Trouble Diagnoses for Quick and Accurate Repair 48
Operational Check 49
A/C System 53
Mode Door Motor 56
Air Mix Door Motor 62
Intake Door Motor 65
Blower Motor 68
Magnet Clutch 76
Insufficient Cooling 82
Insufficient Heating 90
Noise 91
Self-diagnosis 92
Memory Function 93
ECON (ECONOMY) Mode 94
Ambient Sensor Circuit 94
In-vehicle Sensor Circuit 97
Sunload Sensor Circuit 101
Intake Sensor Circuit 104
Air Mix Door Motor PBR Circuit 107
SERVICE PROCEDURE 108
HFC-134a (R-134a) Service Procedure 108
Maintenance of Lubricant Quantity in Compressor 110
Compressor 113
Compressor Clutch 113
Heater Unit (Heater Core) 117
Blower and Cooling Unit (A/C Evaporator) 118
Refrigerant Lines 119
Belt 123
Idle Air Control Valve (IACV) - Auxiliary Air Control (AAC) Valve 124
Ventilation Air Filter 124
SERVICE DATA AND SPECIFICATIONS (SDS) 125
Auto 125

MANUAL

PRECAUTIONS 126
Supplemental Restraint System (SRS) "AIR BAG" and "SEAT BELT PRE-TENSIONER" 126
Precautions for Working with HFC-134a (R-134a) 126
General Refrigerant Precautions 127
Precautions for Refrigerant Connection 127
Precautions for Servicing Compressor 130
Precautions for Service Equipment 130
Wiring Diagrams and Trouble Diagnoses 132

CONTENTS (Cont'd)

PREPARATION 133
Special Service Tools 133
HFC-134a (R-134a) Service Tools and Equipment.....134
DESCRIPTION.....136
Refrigeration System 136
V-6 Variable Displacement Compressor.....137
Component Layout 142
Control Operation 143
Discharge Air Flow.....144
System Description.....145
TROUBLE DIAGNOSES.....146
Component Location.....146
Circuit Diagram - Air Conditioner.....148
Wiring Diagram - A/C, Heater - 149
Wiring Diagram - A/C, M - 150
How to Perform Trouble Diagnoses for Quick and Accurate Repair 154
Operational Check.....155
A/C System.....157
Mode Door 160
Air Mix Door.....163
Intake Door 167
Blower Motor.....170
Magnet Clutch.....176
Insufficient Cooling 183
Insufficient Heating 191
Noise.....192
SERVICE PROCEDURE.....193
HFC-134a (R-134a) Service Procedure.....193
Maintenance of Lubricant Quantity in Compressor 195
Compressor 198
Compressor Clutch.....198
Heater Unit (Heater Core) 202
Blower and Cooling Unit (A/C Evaporator) 203
Refrigerant Lines 204
Belt.....208
Idle Air Control Valve (IACV) - Auxiliary Air Control (AAC) Valve 209
Ventilation Air Filter.....209
SERVICE DATA AND SPECIFICATIONS (SDS) 210
Manual 210

Supplemental Restraint System (SRS) "AIR BAG" and "SEAT BELT PRE-TENSIONER"

NFHA0270

The Supplemental Restraint System such as "AIR BAG" and "SEAT BELT PRE-TENSIONER" used along with a seat belt, helps to reduce the risk or severity of injury to the driver and front passenger for certain types of collision. The SRS system composition which is available to NISSAN MODEL A33 is as follows (The composition varies according to the destination and optional equipment.):

- For a frontal collision
  The Supplemental Restraint System consists of driver air bag module (located in the center of the steering wheel), front passenger air bag module (located on the instrument panel on passenger side), seat belt pre-tensioners, a diagnosis sensor unit, warning lamp, wiring harness and spiral cable.
- For a side collision
  The Supplemental Restraint System consists of front side air bag module (located in the outer side of front seat), satellite sensor, diagnosis sensor unit (one of components of air bags for a frontal collision), wiring harness, warning lamp (one of components of air bags for a frontal collision).

Information necessary to service the system safely is included in the **RS section** of this Service Manual.

WARNING:

- **To avoid rendering the SRS inoperative, which could increase the risk of personal injury or death in the event of a collision which would result in air bag inflation, all maintenance should be performed by an authorized NISSAN dealer.**
- **Improper maintenance, including incorrect removal and installation of the SRS, can lead to personal injury caused by unintentional activation of the system. For removal of Spiral Cable and Air Bag Module, see the RS section.**
- **Do not use electrical test equipment on any circuit related to the SRS unless instructed to in this Service Manual. Spiral cable and wiring harnesses covered with yellow insulation tape either just before the harness connectors or for the complete harness are related to the SRS.**

Precautions for Working with HFC-134a (R-134a)

NFHA0154

WARNING:

- **CFC-12 (R-12) refrigerant and HFC-134a (R-134a) refrigerant are not compatible. These refrigerants must never be mixed, even in the smallest amounts. If the refrigerants are mixed and compressor failure is likely to occur.**
- **Use only specified lubricant for the HFC-134a (R-134a) A/C system and HFC-134a (R-134a) components. If lubricant other than that specified is used, compressor failure is likely to occur.**
- **The specified HFC-134a (R-134a) lubricant rapidly absorbs moisture from the atmosphere. The following handling precautions must be observed:**

a) When removing refrigerant components from a vehicle, immediately cap (seal) the component to minimize the entry of moisture from the atmosphere.

b) When installing refrigerant components to a vehicle, do not remove the caps (unseal) until just before connecting the components. Connect all refrigerant loop components as quickly as possible to minimize the entry of moisture into system.

c) Only use the specified lubricant from a sealed container. Immediately reseal containers of lubricant. Without proper sealing, lubricant will become moisture saturated and should not be used.

d) Avoid breathing A/C refrigerant and lubricant vapor or mist. Exposure may irritate eyes, nose and throat. Use only approved recovery/recycling equipment to discharge HFC-134a (R-134a) refrigerant. If accidental system discharge occurs, ventilate work area before resuming service. Additional health and safety information may be obtained from refrigerant and lubricant manufacturers.

e) Do not allow lubricant (Nissan A/C System Oil Type S) to come in contact with styrofoam parts. Damage may result.

General Refrigerant Precautions

=NFHA0155

WARNING:

- **Do not release refrigerant into the air. Use approved recovery/recycling equipment to capture the refrigerant every time an air conditioning system is discharged.**
- **Always wear eye and hand protection (goggles and gloves) when working with any refrigerant or air conditioning system.**
- **Do not store or heat refrigerant containers above 52°C (125°F).**
- **Do not heat a refrigerant container with an open flame; if container warming is required, place the bottom of the container in a warm pail of water.**
- **Do not intentionally drop, puncture, or incinerate refrigerant containers.**
- **Keep refrigerant away from open flames: poisonous gas will be produced if refrigerant burns.**
- **Refrigerant will displace oxygen, therefore be certain to work in well ventilated areas to prevent suffocation.**
- **Do not pressure test or leak test HFC-134a (R-134a) service equipment and/or vehicle air conditioning systems with compressed air during repair. Some mixtures of air and R-134a have been shown to be combustible at elevated pressures. These mixtures, if ignited, may cause injury or property damage. Additional health and safety information may be obtained from refrigerant manufacturers.**

Precautions for Refrigerant Connection

NFHA0156

A new type refrigerant connection has been introduced to all refrigerant lines except the following location.

- Expansion valve to cooling unit

FEATURES OF NEW TYPE REFRIGERANT CONNECTION

NFHA0156S01

- The O-ring has been relocated. It has also been provided with a groove for proper installation. This eliminates the chance of the O-ring being caught in, or damaged by, the mating part. The sealing direction of the O-ring is now set vertically in relation to the contacting surface of the mating part to improve sealing characteristics.
- The reaction force of the O-ring will not occur in the direction that causes the joint to pull out, thereby facilitating piping connections.

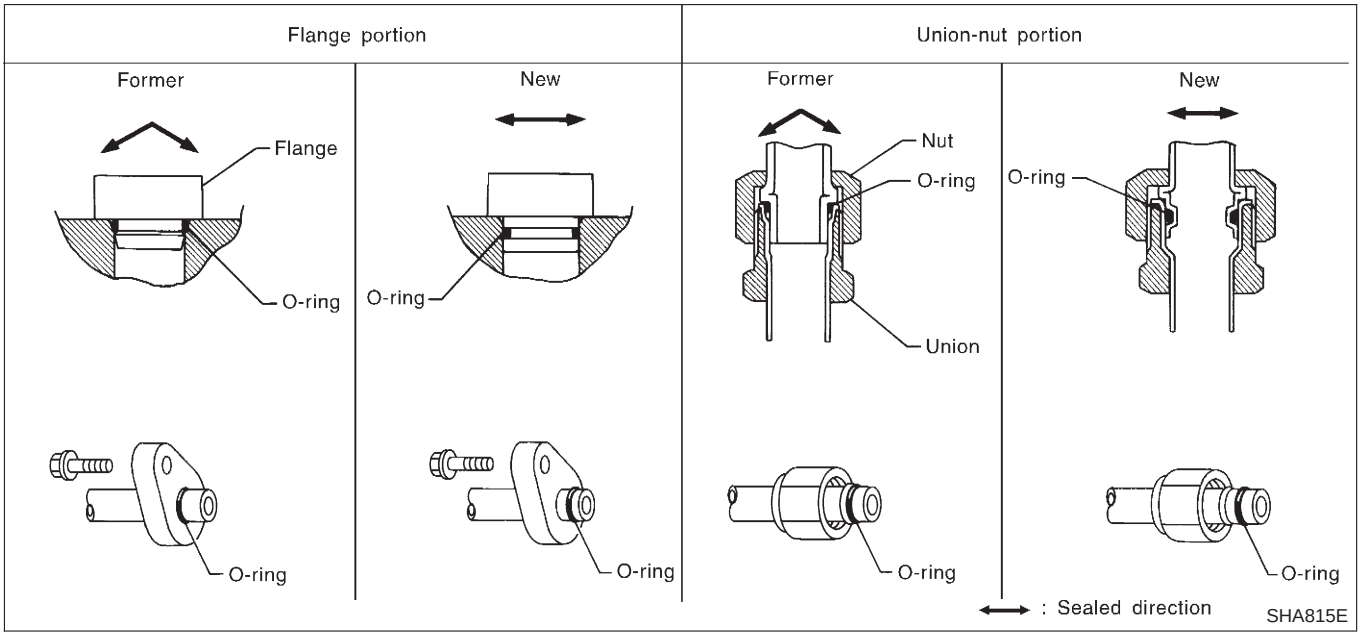

O-RING AND REFRIGERANT CONNECTION

NFHA0156S02

This illustration is for LHD models.
The layout for RHD models is symmetrically opposite.

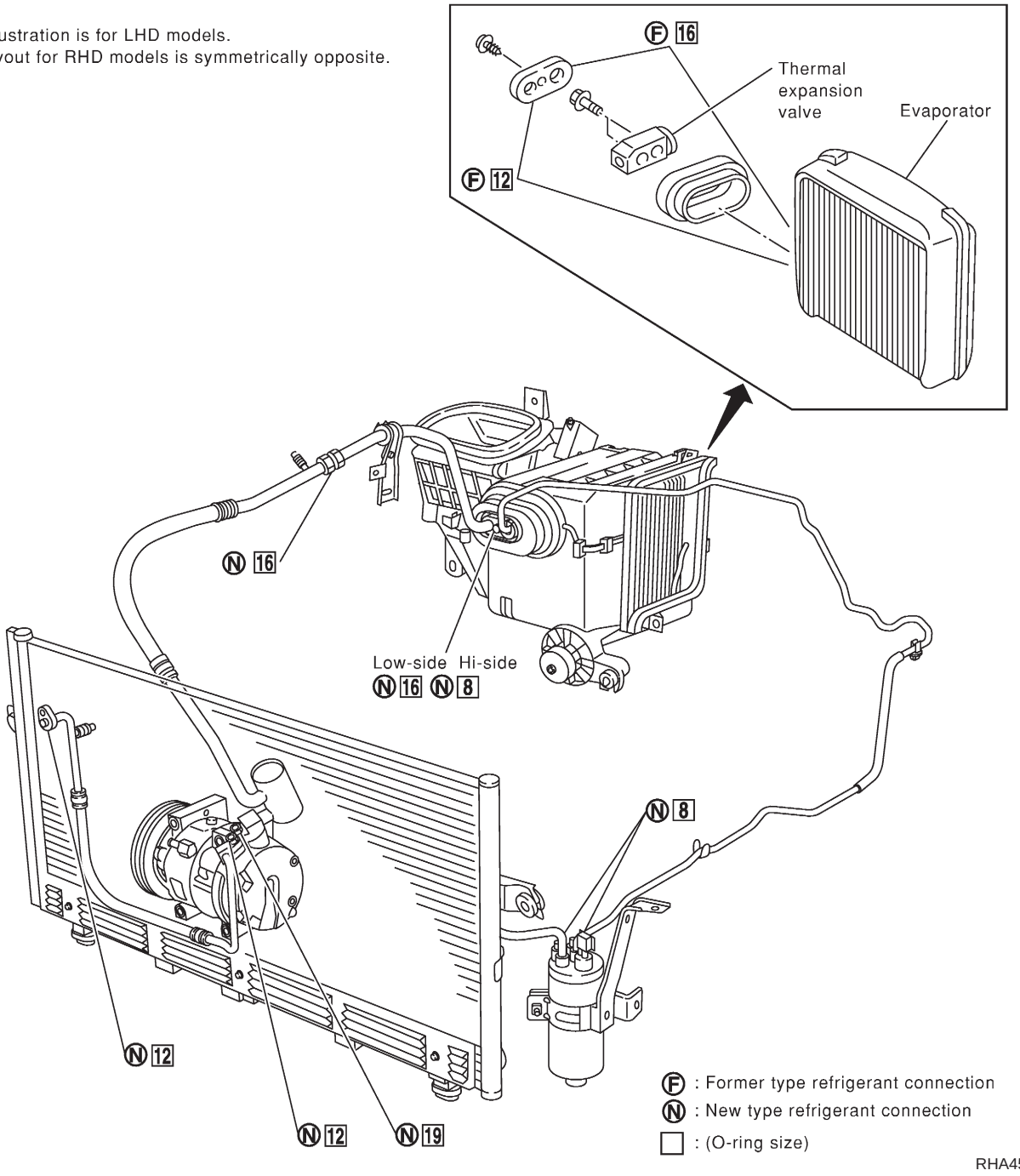

CAUTION:

The new and former refrigerant connections use different O-ring configurations. Do not confuse O-rings since they are not interchangeable. If a wrong O-ring is installed, refrigerant will leak at, or around, the connection.

O-Ring Part Numbers and Specifications

NFHA0156S0201

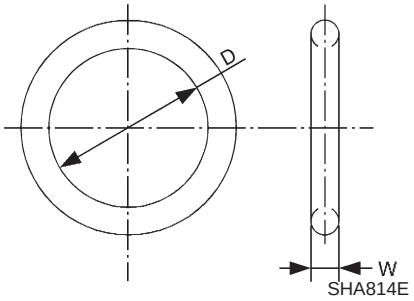

Connection type	O-ring size	Part number	D mm (in)	W mm (in)
New	8	92471 N8210	6.8 (0.268)	1.85 (0.0728)
Former		92470 N8200	6.07 (0.2390)	1.78 (0.0701)
New	12	92472 N8210	10.9 (0.429)	2.43 (0.0957)
Former		92475 71L00	11.0 (0.433)	2.40 (0.0945)
New	16	92473 N8210	13.6 (0.535)	2.43 (0.0957)
Former		92475 72L00	14.3 (0.563)	2.30 (0.0906)
New	19	92474 N8210	16.5 (0.650)	2.43 (0.0957)
Former		92477 N8200	17.12 (0.6740)	1.78 (0.0701)

WARNING:

Make sure all refrigerant is discharged into the recycling equipment and the pressure in the system is less than atmospheric pressure. Then gradually loosen the discharge side hose fitting and remove it.

CAUTION:

When replacing or cleaning refrigerant cycle components, observe the following.

- **When the compressor is removed, store it in the same position as it is when mounted on the car. Failure to do so will cause lubricant to enter the low pressure chamber.**
- **When connecting tubes, always use a torque wrench and a back-up wrench.**
- **After disconnecting tubes, immediately plug all openings to prevent entry of dirt and moisture.**
- **When installing an air conditioner in the vehicle, connect the pipes as the final stage of the operation. Do not remove the seal caps of pipes and other components until just before required for connection.**
- **Allow components stored in cool areas to warm to working area temperature before removing seal caps. This prevents condensation from forming inside A/C components.**
- **Thoroughly remove moisture from the refrigeration system before charging the refrigerant.**
- **Always replace used O-rings.**
- **When connecting tube, apply lubricant to circle of the O-rings shown in illustration. Be careful not to apply lubricant to threaded portion.**
  Lubricant name: Nissan A/C System Oil Type S
  Part number: KLH00-PAGS0
- **O-ring must be closely attached to dented portion of tube.**
- **When replacing the O-ring, be careful not to damage O-ring and tube.**
- **Connect tube until you hear it click, then tighten the nut or bolt by hand until snug. Make sure that the O-ring is installed to tube correctly.**
- **After connecting line, conduct leak test and make sure that there is no leakage from connections. When the gas leaking point is found, disconnect that line and replace the O-ring. Then tighten connections of seal seat to the specified torque.**

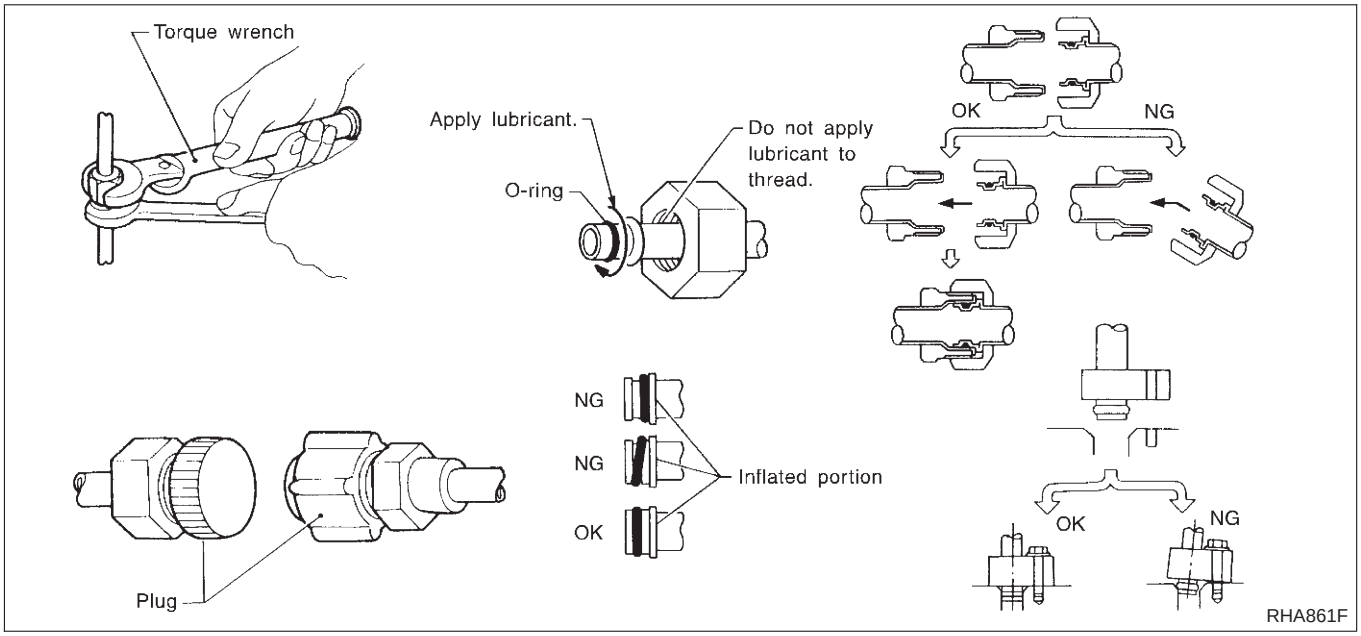

Precautions for Servicing Compressor

NFHA0157

- **Plug all openings to prevent moisture and foreign matter from entering.**
- **When the compressor is removed, store it in the same position as it is when mounted on the car.**
- **When replacing or repairing compressor, follow “Maintenance of Lubricant Quantity in Compressor” exactly. Refer to HA-110.**
- **Keep friction surfaces between clutch and pulley clean. If the surface is contaminated, with lubricant, wipe it off by using a clean waste cloth moistened with thinner.**
- **After compressor service operation, turn the compressor shaft by hand more than five turns in both directions. This will equally distribute lubricant inside the compressor. After the compressor is installed, let the engine idle and operate the compressor for one hour.**
- **After replacing the compressor magnet clutch, apply voltage to the new one and check for normal operation.**

Precautions for Service Equipment

NFHA0158

RECOVERY/RECYCLING EQUIPMENT

NFHA0158S01

Be certain to follow the manufacturers instructions for machine operation and machine maintenance. Never introduce any refrigerant other than that specified into the machine.

ELECTRONIC LEAK DETECTOR

NFHA0158S02

Be certain to follow the manufacturer’s instructions for tester operation and tester maintenance.

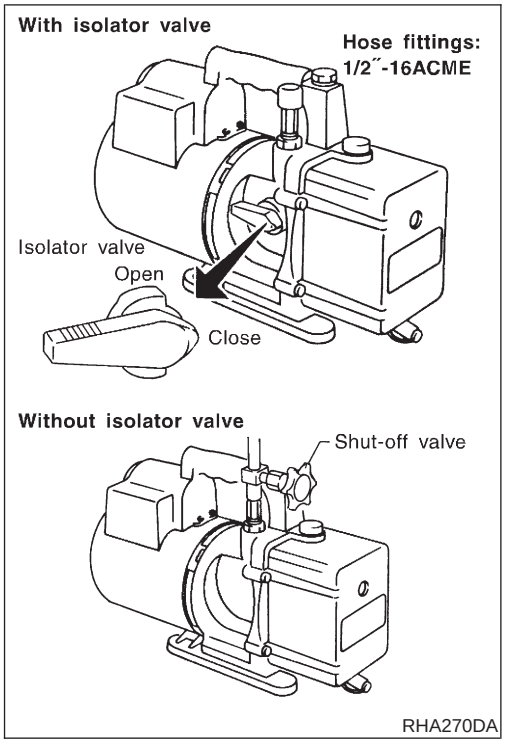

VACUUM PUMP

NFHA0158S03

The lubricant contained inside the vacuum pump is not compatible with the specified lubricant for HFC-134a (R-134a) A/C systems. The vent side of the vacuum pump is exposed to atmospheric pressure. So the vacuum pump lubricant may migrate out of the pump into the service hose. This is possible when the pump is switched off after evacuation (vacuuming) and hose is connected to it.

To prevent this migration, use a manual valve placed near the hose-to-pump connection, as follows.

- Usually vacuum pumps have a manual isolator valve as part of the pump. Close this valve to isolate the service hose from the pump.
- For pumps without an isolator, use a hose equipped with a manual shut-off valve near the pump end. Close the valve to isolate the hose from the pump.
- If the hose has an automatic shut off valve, disconnect the hose from the pump. As long as the hose is connected, the valve is open and lubricating oil may migrate.

Some one-way valves open when vacuum is applied and close under a no vacuum condition. Such valves may restrict the pump's ability to pull a deep vacuum and are not recommended.

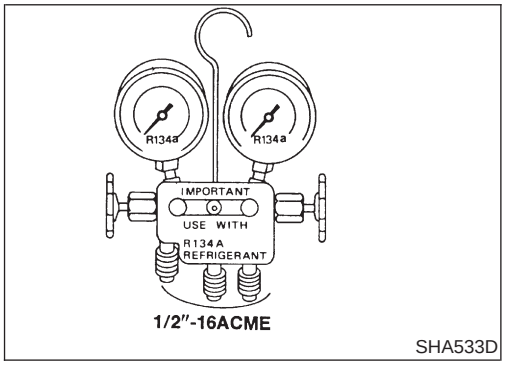

MANIFOLD GAUGE SET

NFHA0158S04

Be certain that the gauge face indicates R-134a or 134a. Be sure the gauge set has 1/2″-16 ACME threaded connections for service hoses. Confirm the set has been used only with refrigerant HFC-134a (R-134a) and specified lubricants.

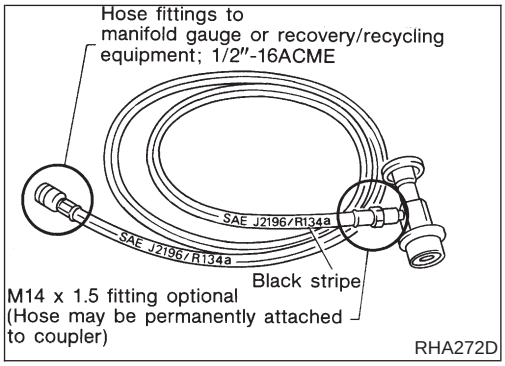

SERVICE HOSES

NFHA0158S05

Be certain that the service hoses display the markings described (colored hose with black stripe). All hoses must include positive shut off devices (either manual or automatic) near the end of the hoses opposite the manifold gauge.

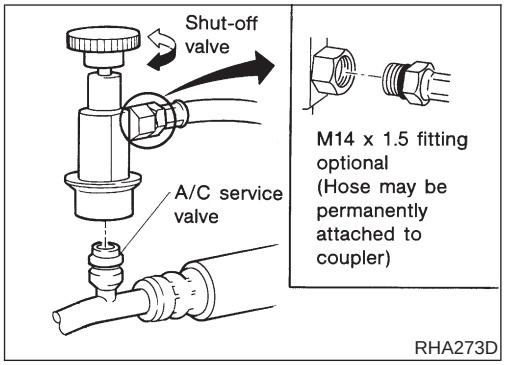

SERVICE COUPLERS

NFHA0158S06

Never attempt to connect HFC-134a (R-134a) service couplers to an CFC-12 (R-12) A/C system. The HFC-134a (R-134a) couplers will not properly connect to the CFC-12 (R-12) system. However, if an improper connection is attempted, discharging and contamination may occur.

Shut-off valve rotation	A/C service valve
Clockwise	Open
Counterclockwise	Close

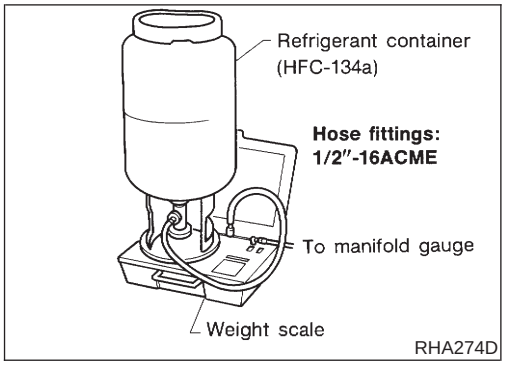

REFRIGERANT WEIGHT SCALE

NFHA0158S07

Verify that no refrigerant other than HFC-134a (R-134a) and specified lubricants have been used with the scale. If the scale controls refrigerant flow electronically, the hose fitting must be 1/2″-16 ACME.

CALIBRATING ACR4 WEIGHT SCALE

NFHA0158S08

Calibrate the scale every three months.
To calibrate the weight scale on the ACR4:

1. Press **Shift/Reset** and **Enter** at the same time.
2. Press **8787**. "**A1**" will be displayed.
3. Remove all weight from the scale.
4. Press **0**, then press **Enter**. "**0.00**" will be displayed and change to "**A2**".
5. Place a known weight (dumbbell or similar weight), between 4.5 and 8.6 kg (10 and 19 lb) on the center of the weight scale.
6. Enter the known weight using four digits. (Example 10 lb = 10.00, 10.5 lb = 10.50)
7. Press **Enter** — the display returns to the vacuum mode.
8. Press **Shift/Reset** and **Enter** at the same time.
9. Press **6** — the known weight on the scale is displayed.
10. Remove the known weight from the scale. "**0.00**" will be displayed.
11. Press **Shift/Reset** to return the ACR4 to the program mode.

CHARGING CYLINDER

NFHA0158S09

Using a charging cylinder is not recommended. Refrigerant may be vented into air from cylinder's top valve when filling the cylinder with refrigerant. Also, the accuracy of the cylinder is generally less than that of an electronic scale or of quality recycle/recharge equipment.

Wiring Diagrams and Trouble Diagnoses

NFHA0159

When you read wiring diagrams, refer to the following:

- ***GI-11***, "HOW TO READ WIRING DIAGRAMS" in GI section
- ***EL-9***, "Wiring Diagram — POWER —" for power distribution circuit in EL section

When you perform trouble diagnoses, refer to the following:

- ***GI-33***, "HOW TO FOLLOW TROUBLE DIAGNOSES" in GI section
- ***GI-22***, "HOW TO PERFORM EFFICIENT DIAGNOSIS FOR AN ELECTRICAL INCIDENT" in GI section

Special Service Tools

NFHA0160

Tool number Tool name	Description	
KV99106100 Clutch disc wrench	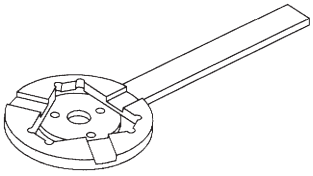 NT232 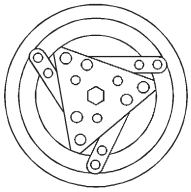 When replacing the magnet clutch in the above compressor, use a clutch disc wrench with the pin side on the clutch disc to remove it. 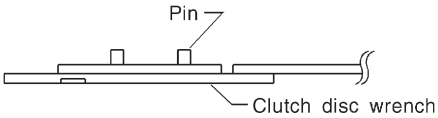 NT378	Removing center bolt
KV99232340 or KV992T0001 Clutch disc puller	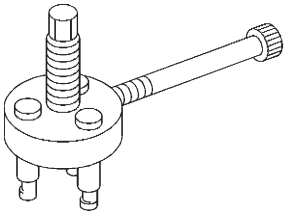 NT376	Removing clutch disc
KV99106200 Pulley installer	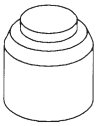 NT235	Installing pulley

HFC-134a (R-134a) Service Tools and Equipment

=NFHA0161

Never mix HFC-134a refrigerant and/or its specified lubricant with CFC-12 (R-12) refrigerant and/or its lubricant.
Separate and non-interchangeable service equipment must be used for handling each type of refrigerant/lubricant.
Refrigerant container fittings, service hose fittings and service equipment fittings (equipment which handles refrigerant and/or lubricant) are different between CFC-12 (R-12) and HFC-134a (R-134a). This is to avoid mixed use of the refrigerants/lubricant.
Adapters that convert one size fitting to another must never be used: refrigerant/lubricant contamination will occur and compressor failure will result.

Tool number Tool name	Description	
HFC-134a (R-134a) refrigerant	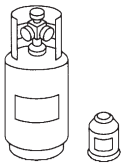 NT196	Container color: Light blue Container marking: HFC-134a (R-134a) Fitting size: Thread size ● Large container 1/2″-16 ACME
KLH00-PAGS0 Nissan A/C System Oil Type S	 NT197	Type: Poly alkylene glycol oil (PAG), type S Application: HFC-134a (R-134a) swash plate (piston) compressors (Nissan only) Lubricity: 40 mℓ (1.4 Imp fl oz)
Recovery/Recycling Recharging equipment (ACR4)	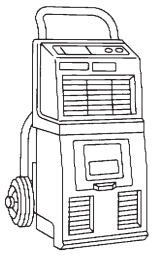 NT195	Function: Refrigerant Recovery and Recycling and Recharging
Electrical leak detector	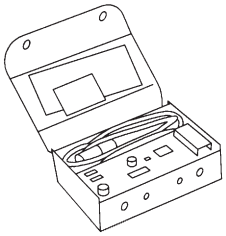 NT198	Power supply: ● DC 12V (Cigarette lighter)
Manifold gauge set (with hoses and couplers)	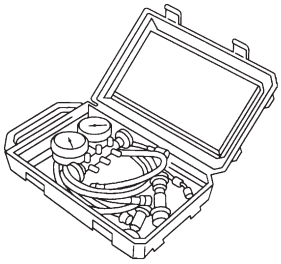 NT199	Identification: ● The gauge face indicates R-134a. Fitting size: Thread size ● 1/2″-16 ACME

HFC-134a (R-134a) Service Tools and Equipment (Cont'd)

Tool number Tool name	Description	
Service hoses ● High side hose ● Low side hose ● Utility hose	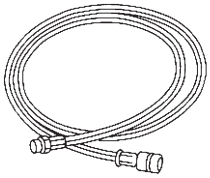 NT201	Hose color: ● Low hose: Blue with black stripe ● High hose: Red with black stripe ● Utility hose: Yellow with black stripe or green with black stripe Hose fitting to gauge: ● 1/2″-16 ACME
Service couplers ● High side coupler ● Low side coupler	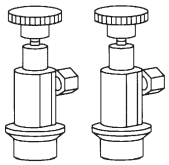 NT202	Hose fitting to service hose: ● M14 x 1.5 fitting is optional or permanently attached.
Refrigerant weight scale	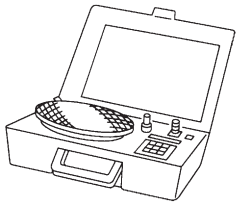 NT200	For measuring of refrigerant Fitting size: Thread size ● 1/2″-16 ACME
Vacuum pump (Including the isolator valve)	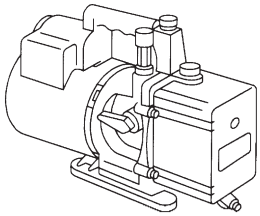 NT203	Capacity: ● Air displacement: 4 CFM ● Micron rating: 20 microns ● Oil capacity: 482 g (17 oz) Fitting size: Thread size ● 1/2″-16 ACME

Refrigeration System

REFRIGERATION CYCLE

NFHA0162

Refrigerant Flow

NFHA0162S01

The refrigerant flows in the standard pattern, that is, through the compressor, the condenser, the liquid tank, through the evaporator, and back to the compressor. The refrigerant evaporation through the evaporator coil is controlled by an externally equalized expansion valve, located inside the evaporator case.

Freeze Protection

NFHA0162S02

Under normal operating conditions, when the A/C is switched on, the compressor runs continuously, and the evaporator pressure, and therefore, temperature is controlled by the V-6 variable displacement compressor to prevent freeze up.

Refrigerant System Protection

NFHA0162S03

Refrigerant Pressure Sensor

NFHA0162S0301

The refrigerant system is protected against excessively high or low pressures by the refrigerant pressure sensor, located on the liquid tank. If the system pressure rises above, or falls below the specifications, the refrigerant pressure sensor detects the pressure inside the refrigerant line and sends the voltage signal to the ECM. ECM makes the A/C relay go OFF and stops the compressor when pressure on the high pressure side detected by refrigerant pressure sensor is over about 2,746 kPa (27.5 bar, 28 kg/cm^2, 398 psi), or below about 177 kPa (1.77 bar, 1.8 kg/cm^2, 26 psi).

Pressure Relief Valve

NFHA0162S0302

The refrigerant system is also protected by a pressure relief valve, located in the rear head of the compressor. When the pressure of refrigerant in the system increases to an abnormal level [more than 3,727 kPa (37.3 bar, 38 kg/cm^2, 540 psi)], the release port on the pressure relief valve automatically opens and releases refrigerant into the atmosphere.

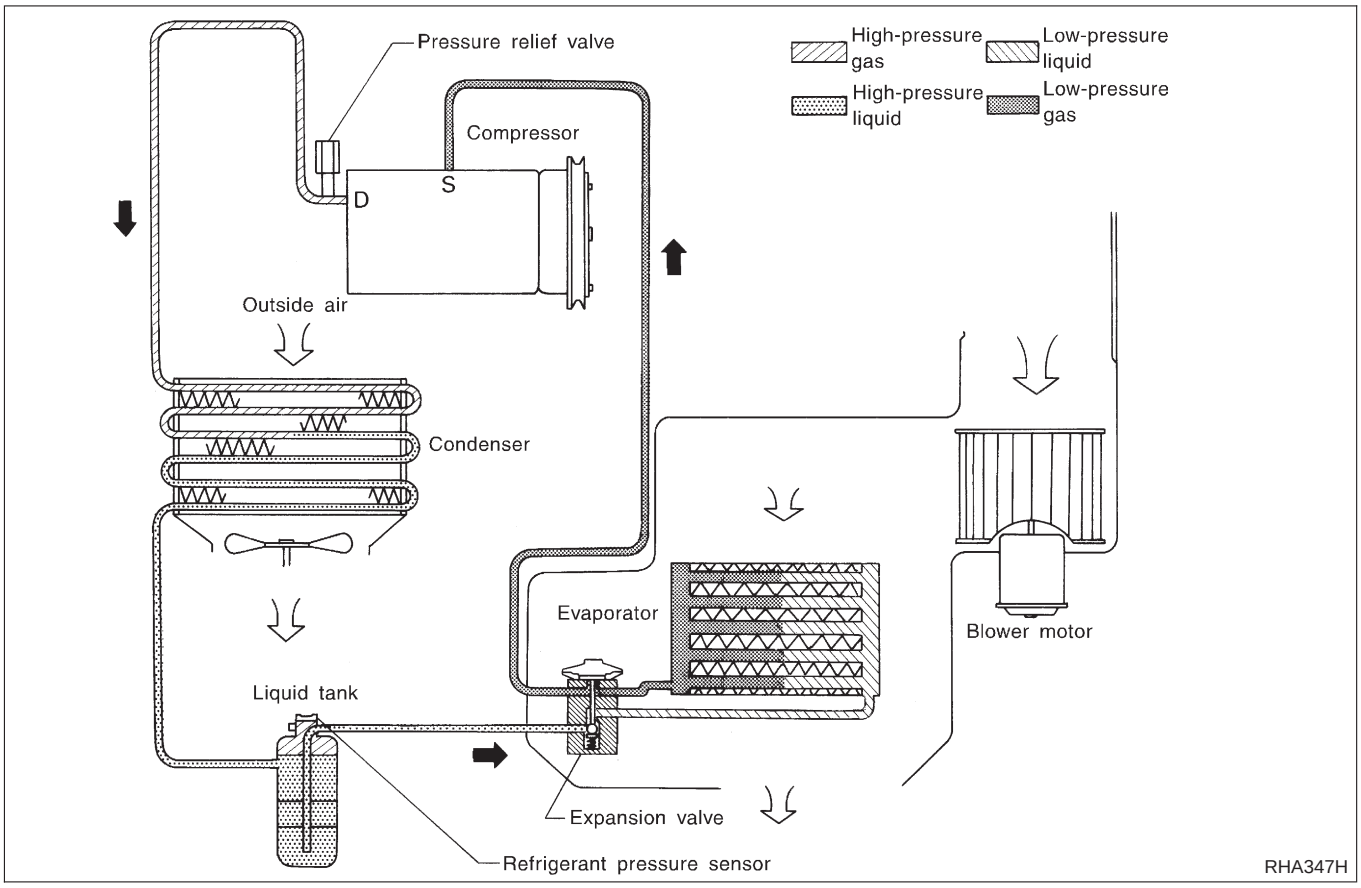

V-6 Variable Displacement Compressor

GENERAL INFORMATION

=NFHA0163

1. The V-6 variable compressor differs from previous units. The vent temperatures of the V-6 variable compress do not drop too far below 5°C (41°F) when:

- evaporator intake air temperature is less than 20°C (68°F)
- engine is running at speeds less than 1,500 rpm.

This is because the V-6 compressor provides a means of “capacity” control.

2. The V-6 variable compressor provides refrigerant control under varying conditions. During cold winters, it may not produce high refrigerant pressure discharge (compared to previous units) when used with air conditioning systems.
3. A “clanking” sound may occasionally be heard during refrigerant charge. The sound indicates that the tilt angle of the swash plate has changed and is not a problem.
4. For air conditioning systems with the V-6 compressor, the clutch remains engaged unless: the system main switch, fan switch or ignition switch is turned OFF. When ambient (outside) temperatures are low or when the amount of refrigerant is insufficient, the clutch is disengaged to protect the compressor.
5. A constant range of suction pressure is maintained when engine speed is greater than a certain value. It normally ranges from 147 to 177 kPa (1.47 to 1.77 bar, 1.5 to 1.8 kg/cm^2, 21 to 26 psi) under varying conditions.
   In previous compressors, however, suction pressure was reduced with increases in engine speed.

DESCRIPTION

=NFHA0164

General

NFHA0164S01

The variable compressor is basically a swash plate type that changes piston stroke in response to the required cooling capacity.

The tilt of the swash plate allows the piston's stroke to change so that refrigerant discharge can be continuously changed from 14.5 to 184 cm^3 (0.885 to 11.228 cu in).

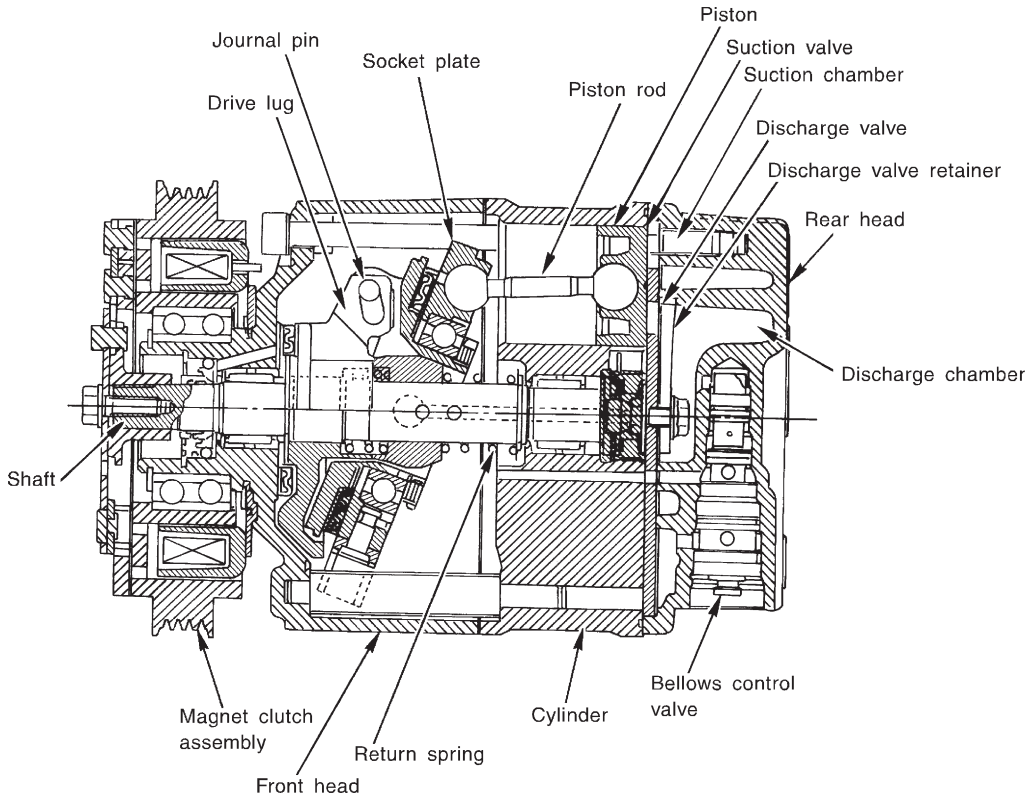

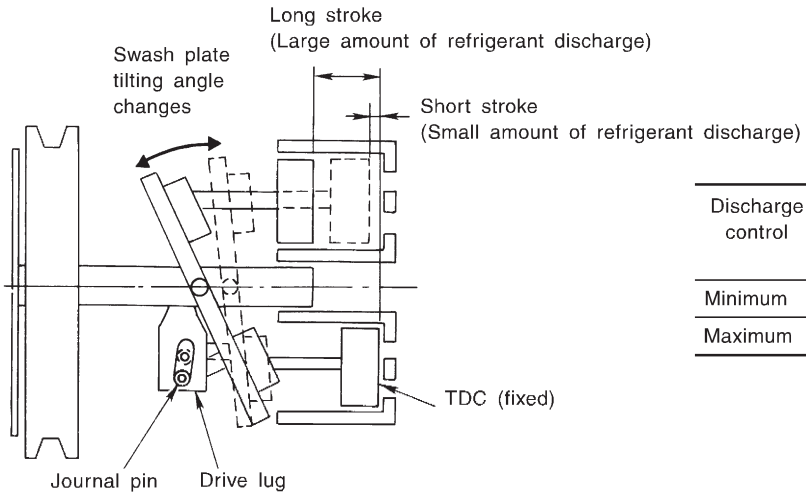

Discharge control	Discharge capacity cm^3 (cu in)/rev.	Piston stroke length mm (in)
Minimum	14.5 (0.885)	2.3 (0.091)
Maximum	184 (11.228)	28.6 (1.126)

RHA037DD

Operation

=NFHA0164S02

1. Operation Control Valve

NFHA0164S0201

Operation control valve is located in the suction port (low-pressure) side, and opens or closes in response to changes in refrigerant suction pressure.
Operation of the valve controls the internal pressure of the crankcase.
The angle of the swash plate is controlled between the crankcase's internal pressure and the piston cylinder pressure.

2. Maximum Cooling

NFHA0164S0202

Refrigerant pressure on the low-pressure side increases with an increase in heat loads.
When this occurs, the control valve's bellows compress to open the low-pressure side valve and close the high-pressure side valve.
This causes the following pressure changes:

- the crankcase's internal pressure to equal the pressure on the low-pressure side;
- the cylinder's internal pressure to be greater than the crankcase's internal pressure.

Under this condition, the swash plate is set to the maximum stroke position.

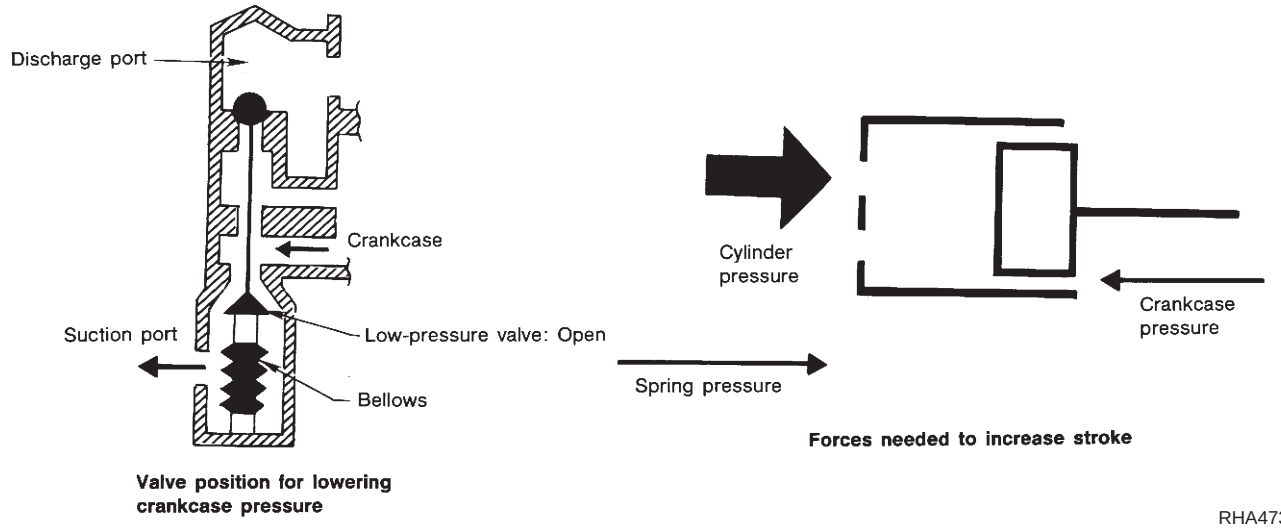

RHA473C

3. Capacity Control

=NFHA0164S0203

- Refrigerant pressure on suction side is low during high speed driving or when ambient or interior temperature is low.
- The bellows expands when refrigerant pressure on the suction pressure side drops below approximately 177 kPa (1.77 bar, 1.8 kg/cm^2, 26 psi).
  Since suction pressure is low, it makes the suction port close and the discharge port open. Thus, crankcase pressure becomes high as high pressure enters the crankcase.
- The force acts around the journal pin near the swash plate, and is generated by the pressure difference before and behind the piston.
  The drive lug and journal pin are located where the piston generates the highest pressure. Piston pressure is between suction pressure Ps and discharge pressure Pd, which is near suction pressure Ps. If crankcase pressure Pc rises due to capacity control, the force around the journal pin makes the swash plate angle decrease and also the piston stroke decrease. In other words, crankcase pressure increase triggers pressure difference between the piston and the crankcase. The pressure difference changes the angle of the swash plate.

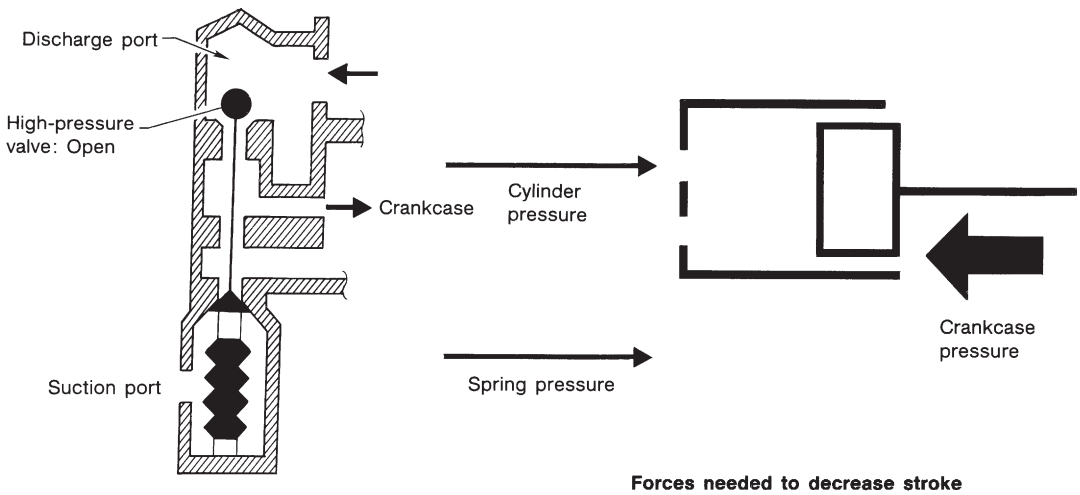

Valve position for raising crankcase pressure

Forces needed to decrease stroke

RHA474C

IACV-AAC CONTROL SYSTEM

=NFHA0165

Operation

NFHA0165S02

When the air conditioner is OFF, the ECM detects the load applied to the engine, and controls the IACV-AAC valve to adjust the engine idling speed to the appropriate rpm by supplying additional air from the IACV-AAC valve.

When the air conditioner is ON (A/C relay is ON), refrigerant-pressure sensor converts refrigeration-pressure on the high pressure side into the voltage value, which is output to ECM which protects refrigeration cycle and control idle speed by the output voltage data, and additional air is supplied to the engine. If the appropriate engine speed is not reached, the IACV-AAC valve supplies the additional air required to increase the engine rpm.

Component Layout

NFHA0166

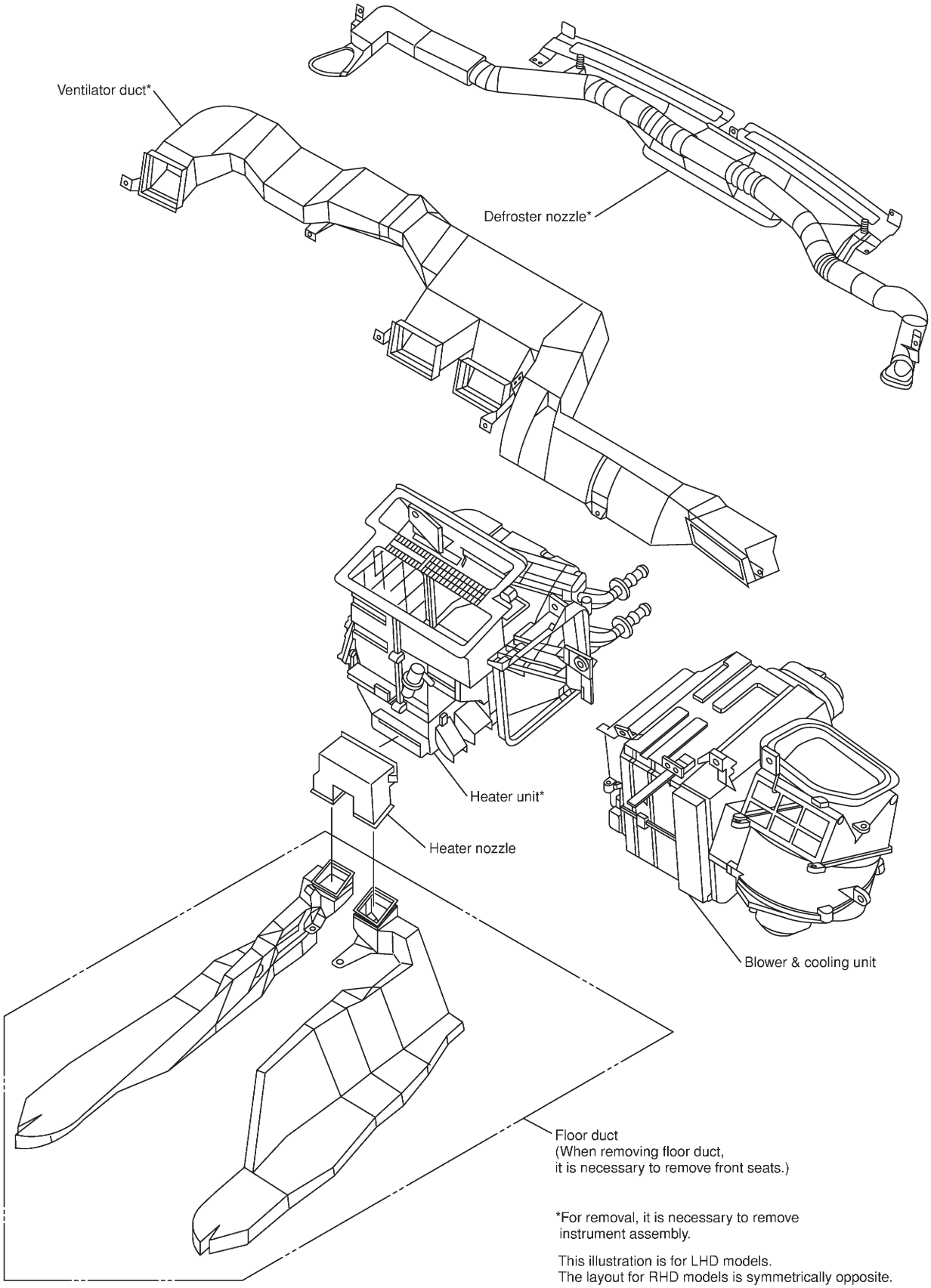

RHA349HA

Introduction

NFHA0167

AIR CONDITIONER LAN SYSTEM OVERVIEW CONTROL SYSTEM

NFHA0167S01

The LAN system consists of auto amp., mode door motor, air mix door motor and intake door motor.
A configuration of these components is shown in the diagram below.

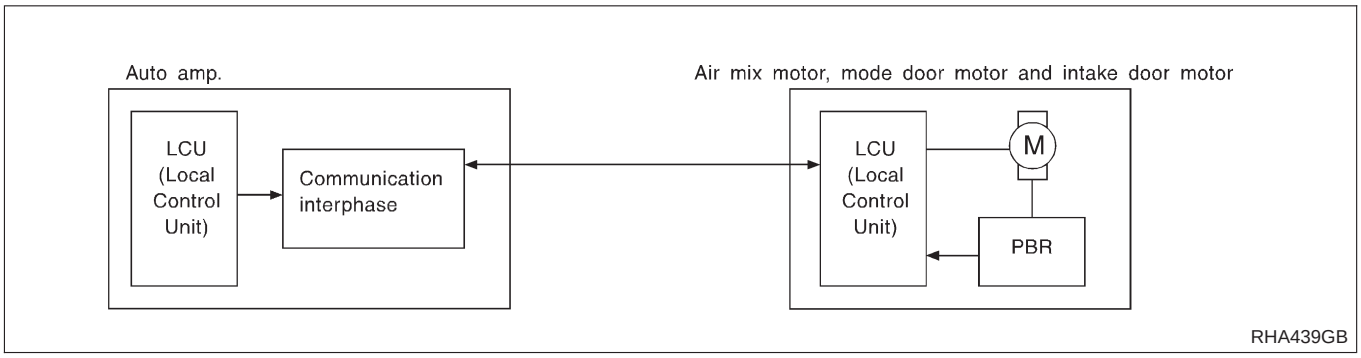

Features

NFHA0168

SYSTEM CONSTRUCTION (LAN)

NFHA0168S01

A small network is constructed between the auto amplifier, mode door motor, air mix door motor and intake door motor. The auto amplifier and motors are connected by data transmission lines and motor power supply lines. The LAN network is built through the ground circuits of the three motors.
Addresses, motor opening angle signals, motor stop signals and error checking messages are all transmitted through the data transmission lines connecting the auto amplifier and three motors.
The following functions are contained in LCUs built into the mode door motor, air mix door motor and the intake door motor.

- Address
- Motor opening angle signals
- Data transmission
- Motor stop and drive decision
- Opening angle sensor (PBR function)
- Comparison
- Decision (Auto amplifier indicated value and motor opening angle comparison)

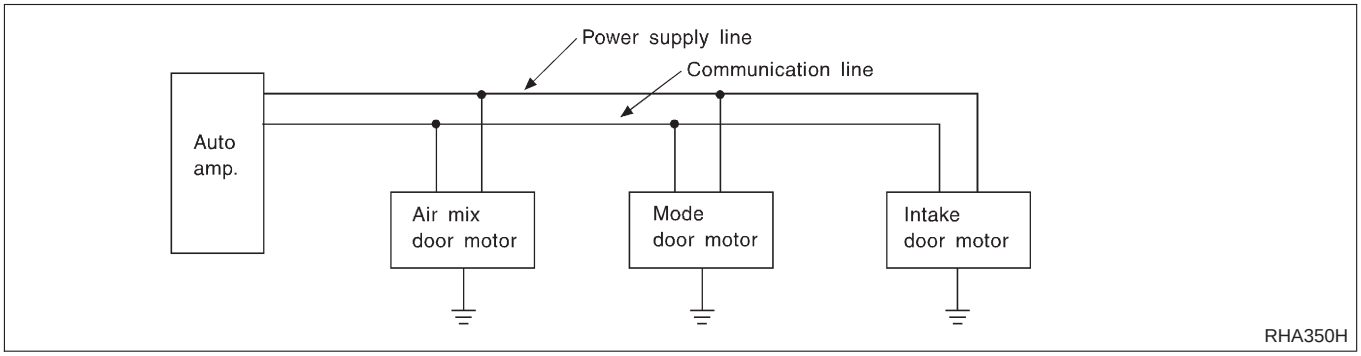

Operation

NFHA0168S0101

The auto amplifier receives data from each of the sensors. The amplifier sends mode door, air mix door and intake door opening angle data to the mode door motor LCU, air mix door LCU and intake door motor LCU. The mode door motor, air mix door motor and intake door motor read their respective signals according to the address signal. Opening angle indication signals received from the auto amplifier and each of the motor position sensors are compared by the LCUs in each motor with the existing decision and opening angles. Subsequently, HOT/COLD, FRESH/RECIRCULATION or DEFROST/VENT operation is selected. The new selection data is returned to the auto amplifier.

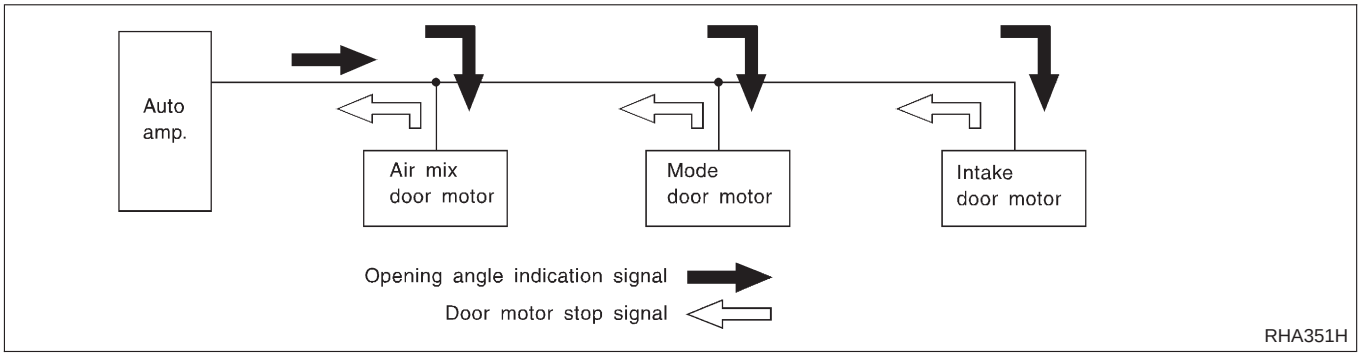

Transmission Data and Transmission Order

NFHA0168S0102

Amplifier data is transmitted consecutively to each of the door motors following the form shown in figure below.
Start: Initial compulsory signal sent to each of the door motors.
Address: Data sent from the auto amplifier is selected according to data-based decisions made by the mode door motor, air mix door motor and intake door motor.
If the addresses are identical, the opening angle data and error check signals are received by the door motor LCUs. The LCUs then make the appropriate error decision. If the opening angle data is normal, door control begins.
If an error exists, the received data is rejected and corrected data received. Finally, door control is based upon the corrected opening angle data.
Opening angle: Data that shows the indicated door opening angle of each door motor.
Error check: Procedure by which sent and received data is checked for errors. Error data is then compiled. The error check prevents corrupted data from being used by the mode door motor, air mix door motor and intake door motor. Error data can be related to the following problems.

- Abnormal electrical frequency
- Poor electrical connections
- Signal leakage from transmission lines
- Signal level fluctuation

Stop signal: At the end of each transmission, a stop operation, in-operation, or internal problem message is delivered to the auto amplifier. This completes one data transmission and control cycle.

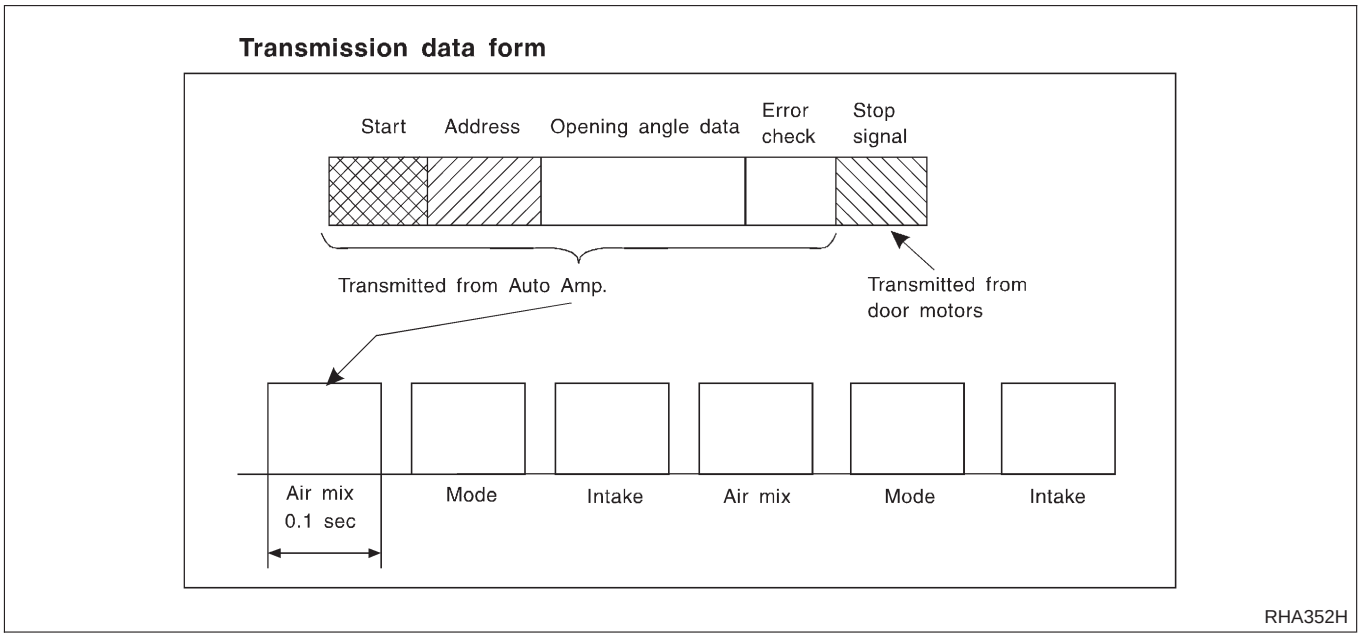

Air Mix Door Control (Automatic Temperature Control)

NFHA0168S0103

The air mix door is automatically controlled so that in-vehicle temperature is maintained at a predetermined value by: The temperature setting, ambient temperature, in-vehicle temperature and amount of sunload.

Fan Speed Control

NFHA0168S0104

Blower speed is automatically controlled based on temperature setting, ambient temperature, in-vehicle temperature, intake temperature, amount of sunload and air mix door position.
With FAN switch set to "AUTO", the blower motor starts to gradually increase air flow volume.
When engine coolant temperature is low, the blower motor operation is delayed to prevent cool air from flowing.

Intake Door Control

NFHA0168S0105

The intake doors are automatically controlled based on temperature setting, ambient temperature, in-vehicle temperature, intake temperature, amount of sunload, air mix door position and ON-OFF operation of the compressor.

Outlet Door Control

NFHA0168S0106

The outlet door is automatically controlled by: The temperature setting, ambient temperature, in-vehicle temperature, intake temperature and amount of sunload.

Magnet Clutch Control

NFHA0168S0107

The ECM controls compressor operation using input signals from the throttle position sensor, refrigerant pressure sensor and auto amplifier.

Self-diagnostic System

NFHA0168S0108

The self-diagnostic system is built into the auto amplifier (LCU) to quickly locate the cause of problems.

Overview of Control System

=NFHA0169

The control system consists of input sensors, switches, the automatic amplifier (microcomputer) and outputs. The relationship of these components is shown in the diagram below:

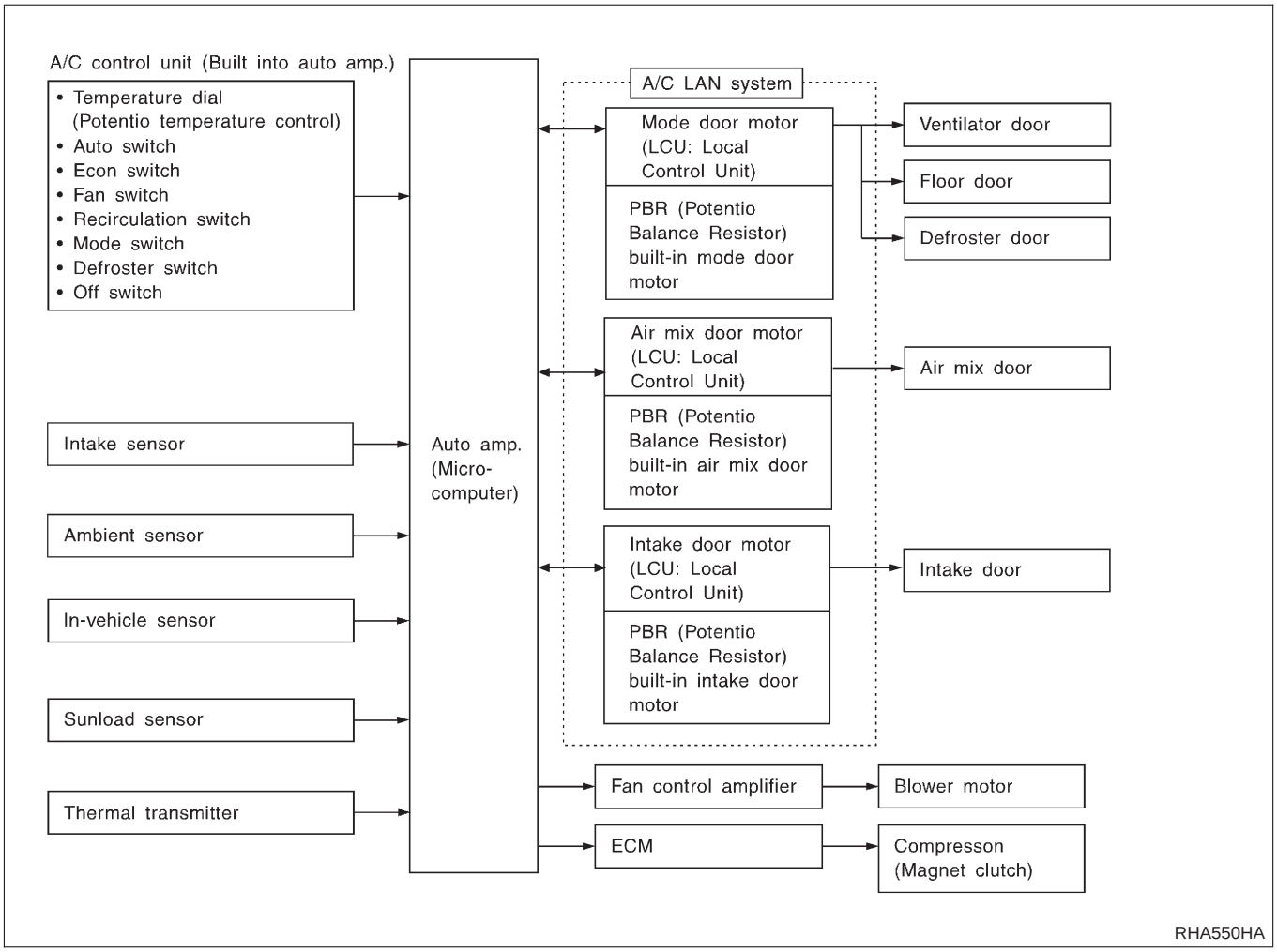

Control Operation

NFHA0170

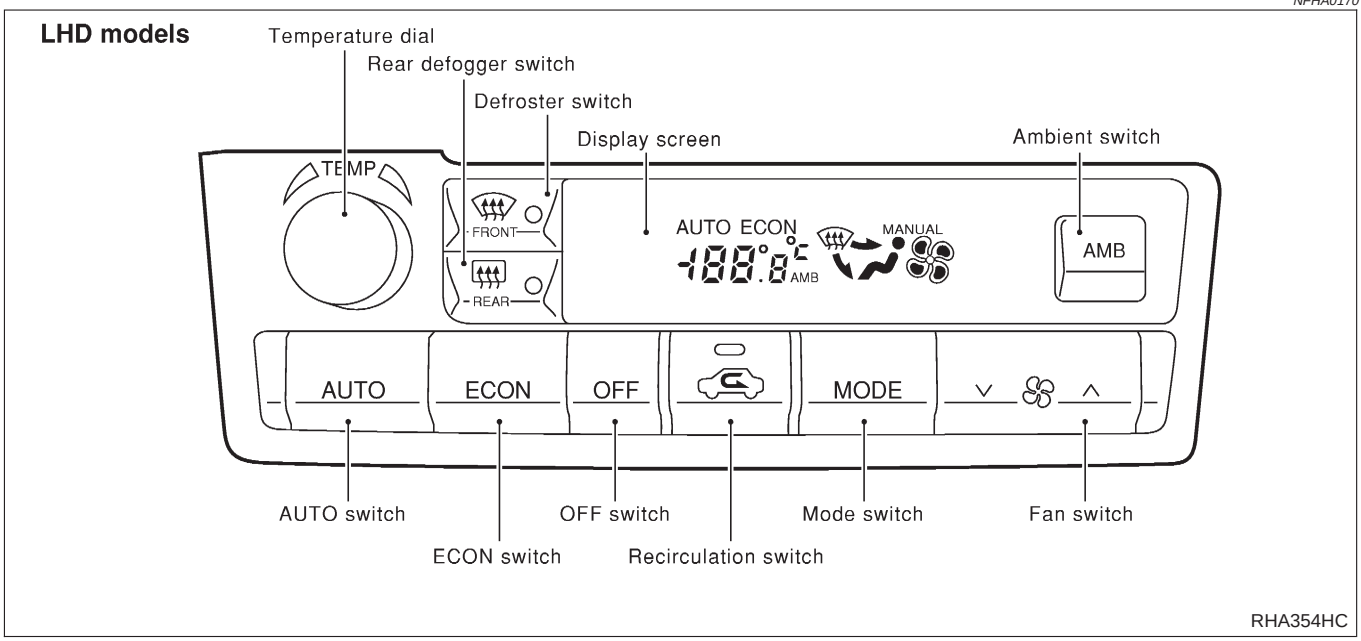

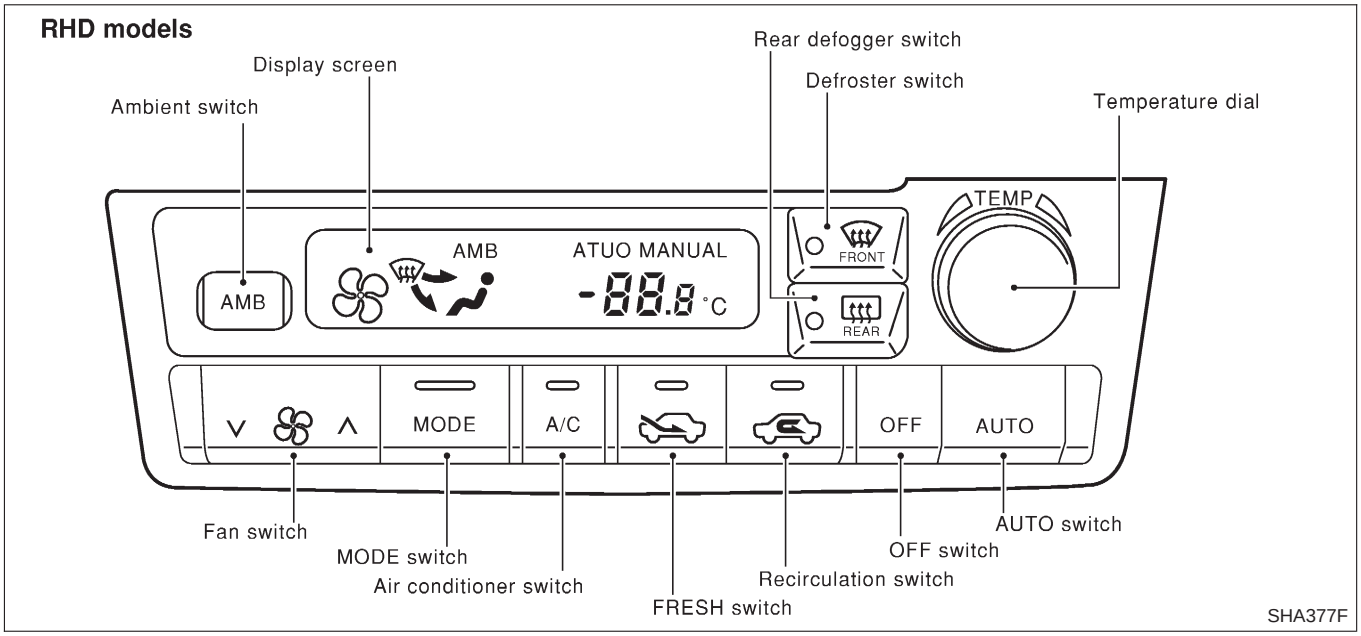

DISPLAY SCREEN

NFHA0170S01

Displays the operational status of the system.

AUTO SWITCH

NFHA0170S02

The compressor, intake doors, air mix door, outlet doors, and blower speed are automatically controlled so that the in-vehicle temperature will reach, and be maintained at the set temperature selected by the operator.
RHD models:
Pressing the AUTO switch illuminates the A/C switch indicator (RHD) when the A/C switch is ON before the AUTO switch is pressed, and turns ON the compressor.

ECON SWITCH (LHD MODELS)

NFHA0170S03

By pressing the ECON switch, the display should indicate ECON and the compressor always turns OFF. With the compressor OFF, the system will not remove heat (cool) or de-humidify. The system will maintain the in-vehicle temperature at the set temperature when the set temperature is above the ambient (outside) temperature. The system will set the intake doors to the outside air position.

TEMPERATURE DIAL (POTENTIO TEMPERATURE CONTROL)

NFHA0170S04

Increases or decreases the set temperature.

OFF SWITCH

NFHA0170S05

The compressor and blower are OFF, the intake doors are set to the outside air position, and the air outlet doors are set to the foot (80% foot and 20% defrost) position.

FAN SWITCH

NFHA0170S06

Manual control of the blower speed. Four speeds are available for manual control (as shown on the display screen):
low , medium low , medium high , high

FRESH SWITCH (RHD MODELS)

NFHA0170S11

OFF position: Interior air is recirculated inside the vehicle.
ON position: Outside air is drawn into the passenger compartment.
(When RECIRCULATION switch is ON, the FRESH switch turns OFF automatically.)

A/C SWITCH (RHD MODELS)

NFHA0170S12

The compressor is ON or OFF.
(Pressing the A/C switch when the AUTO switch is ON will turn off the A/C switch and compressor.)

RECIRCULATION (REC) SWITCH

NFHA0170S07

OFF position: Outside air is drawn into the passenger compartment.
ON position: Interior air is recirculated inside the vehicle.
(When the FRESH switch is ON (RHD models) or the compressor is turned from ON to OFF, the RECIRCULATION switch turns OFF) automatically.

DEFROSTER (DEF) SWITCH

NFHA0170S08

Positions the air outlet doors to the defrost position. Also positions the intake doors to the outside air position.

MODE SWITCHES

NFHA0170S09

Control the air discharge outlets.

REAR WINDOW DEFOGGER SWITCH

NFHA0170S10

When illumination is ON, rear window is defogged.

AMBIENT SWITCH

NFHA0170S13

Shows the ambient (outside) air temperature on display screen for 5 seconds.

Discharge Air Flow

NFHA0171

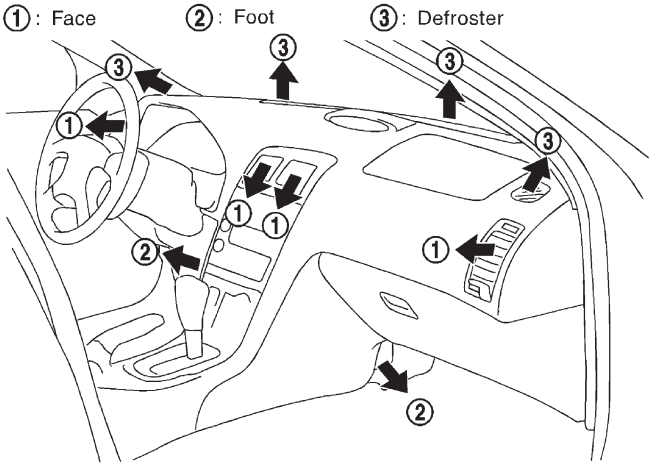

Face
(switch "ON")

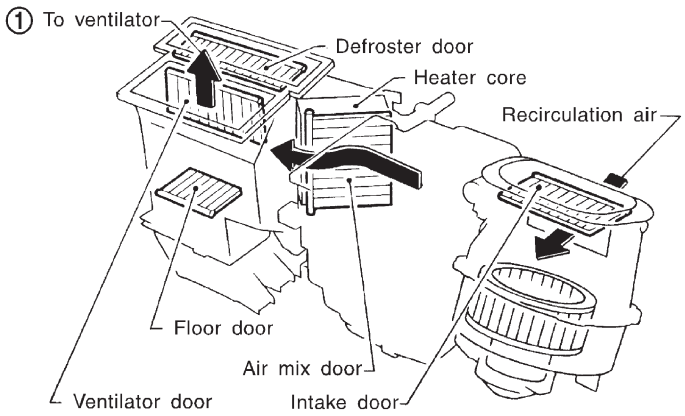

Bi-level
(switch "OFF")

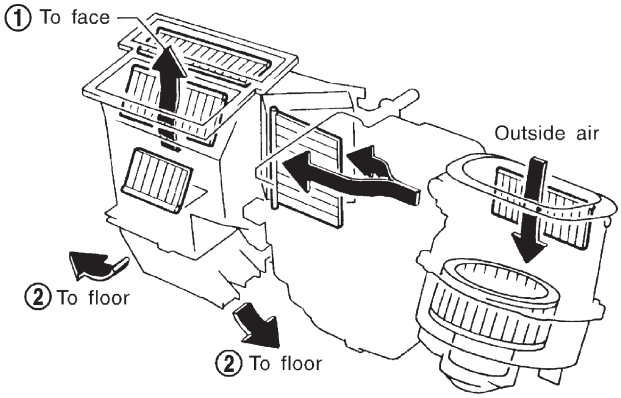

Floor

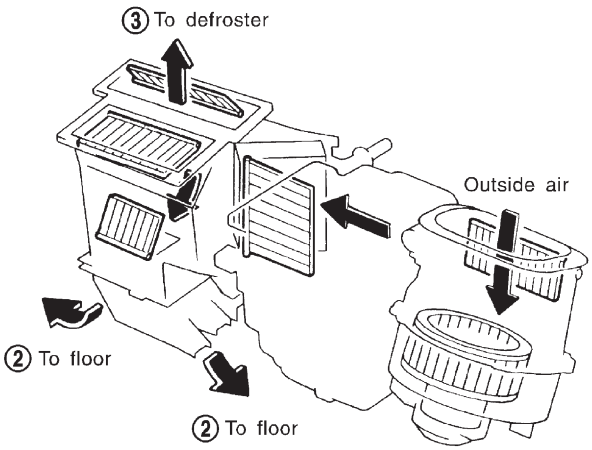

Floor and defroster

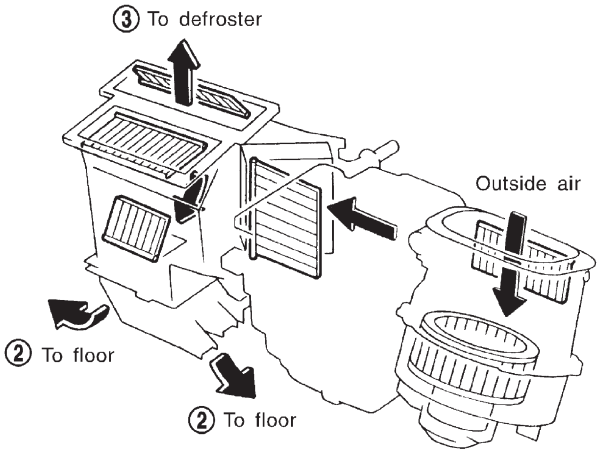

Defroster

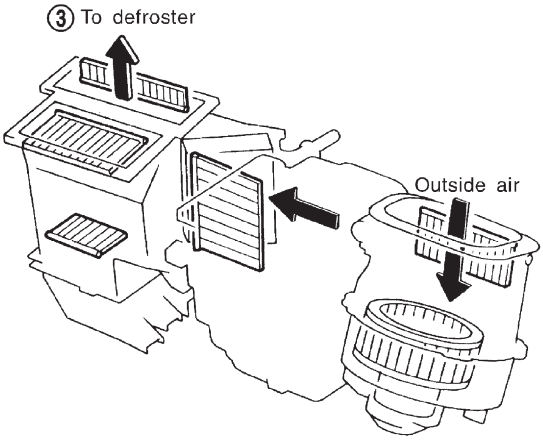

This illustration is for LHD models.
The layout for RHD models is symmetrically opposite.

RHA355HA

System Description

NFHA0246

SWITCHES AND THEIR CONTROL FUNCTIONS

NFHA0246S01

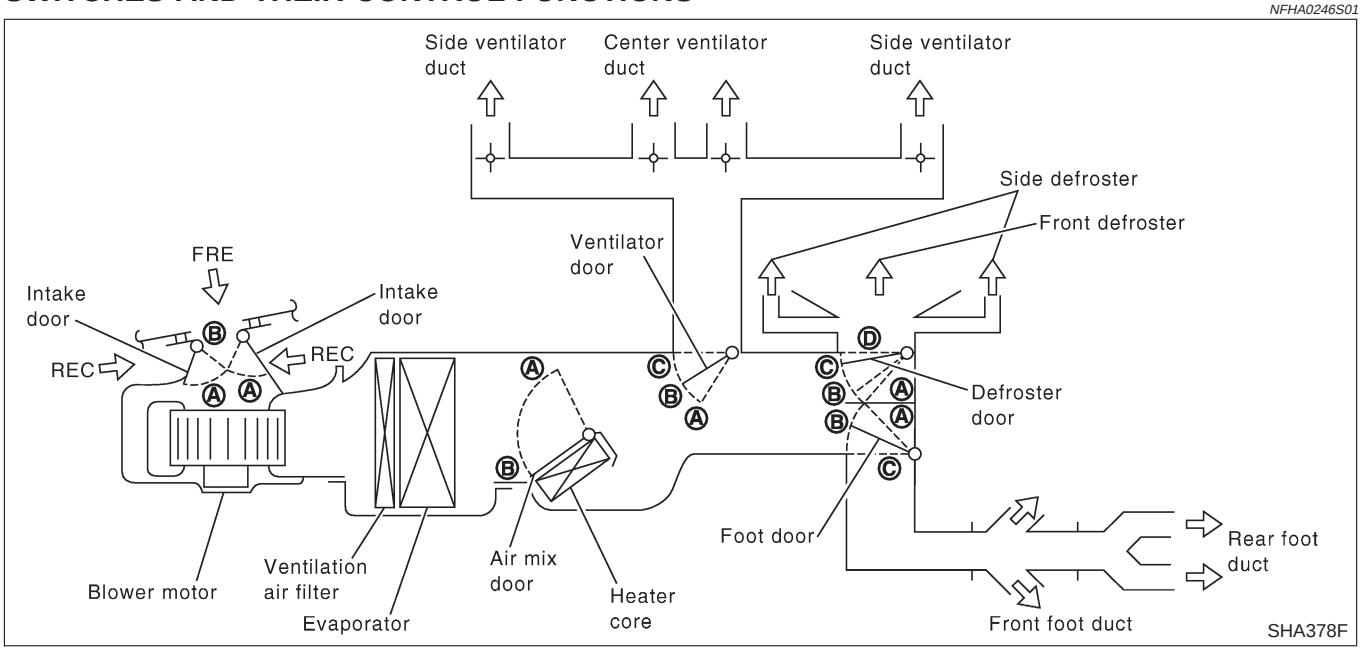

LHD models

NFHA0246S0101

Position or switch	MODE SW				Front DEF SW		ECON SW	AUTO SW	REC SW		Temperature DIAL			OFF SW
	VENT	B/L	FOOT	D/F	ON	OFF			ON	OFF	TEMP			
Door							ECON	AUTO			18.0°C (65°F)	—	32.0°C (85°F)	OFF
Ventilator door	A	B	C	C	C	—	AUTO	AUTO	—		—			C
Foot door	C	B	A	B	C				—		—			A
Defroster door	D	D	C	B	A				—		—			C
Air mix door	—				—				—		B	AUTO	A	—
Intake door	—				A				B	AUTO*1	—			—

*1: Automatically controlled when REC switch is OFF.

RHD models

NFHA0246S0102

Position or switch	MODE SW				Front DEF SW		A/C SW	AUTO SW	Intake SW			Temperature DIAL			OFF SW
	VENT	B/L	FOOT	D/F	ON	OFF			REC SW		FRE SW	TEMP			
							A/C	AUTO							OFF
Door												18.0˚C (65˚F)	—	32.0˚C (85˚F)	
Ventilator door	A	B	C	C	C	—	—	AUTO				—			C
Foot door	C	B	A	B	C							—			A
Defroster door	D	D	C	B	A							—			C
Air mix door	—				—							B	AUTO	A	—
Intake door	—				A			—	B	AUTO*1	A	—			—

*1: Automatically controlled when REC switch is OFF.

SHA379F

Component Location

ENGINE COMPARTMENT

NFHA0172

NFHA0172S01

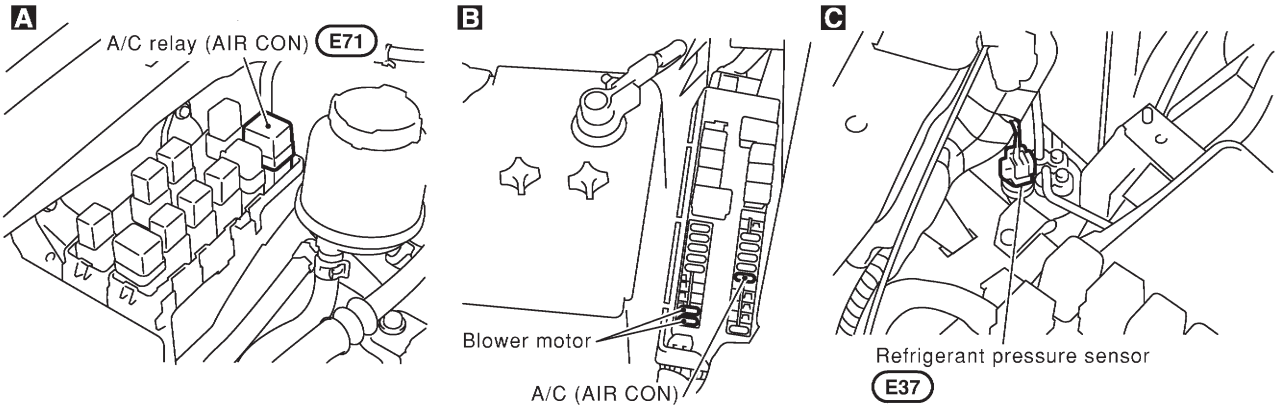

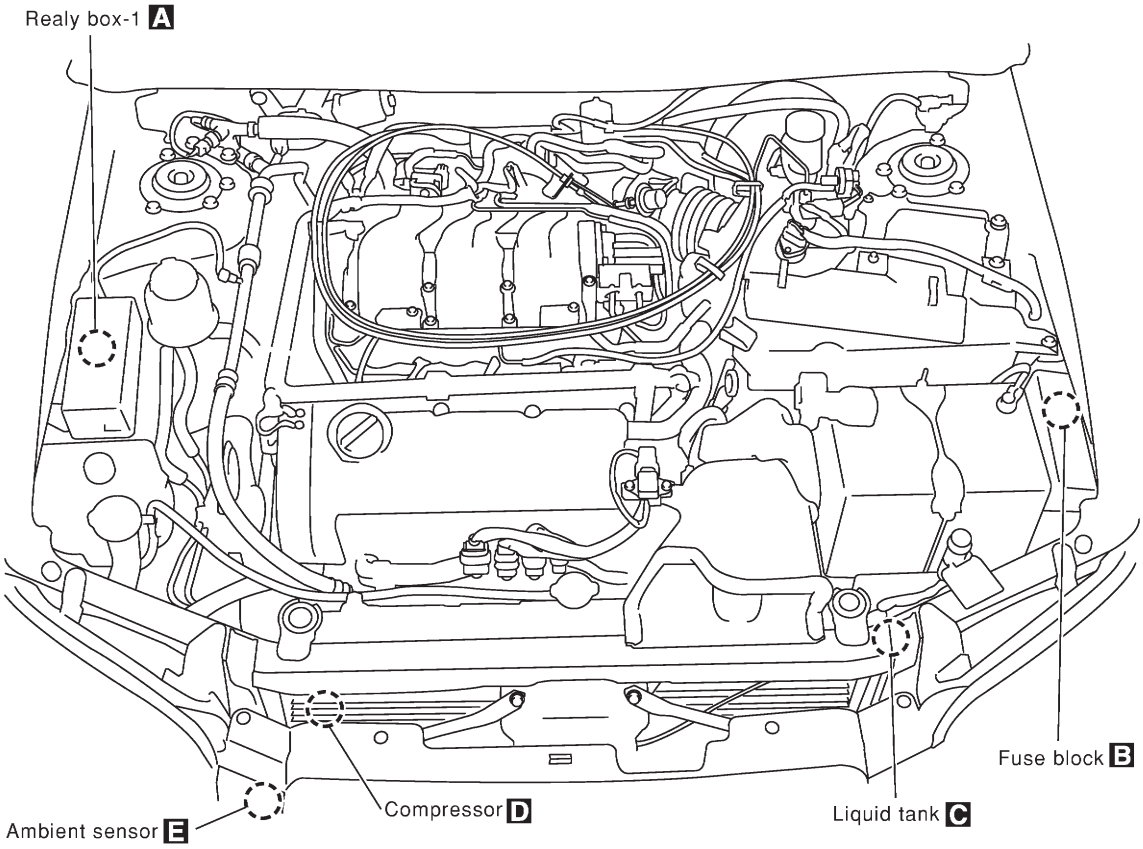

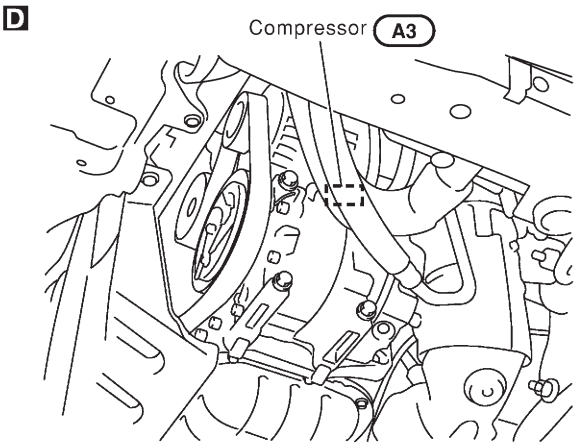

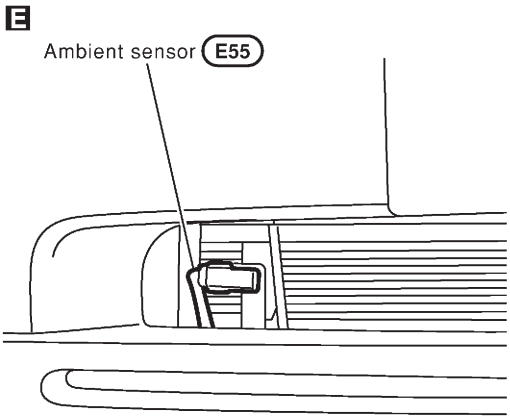

RHA453H

PASSENGER COMPARTMENT

NFHA0172S02

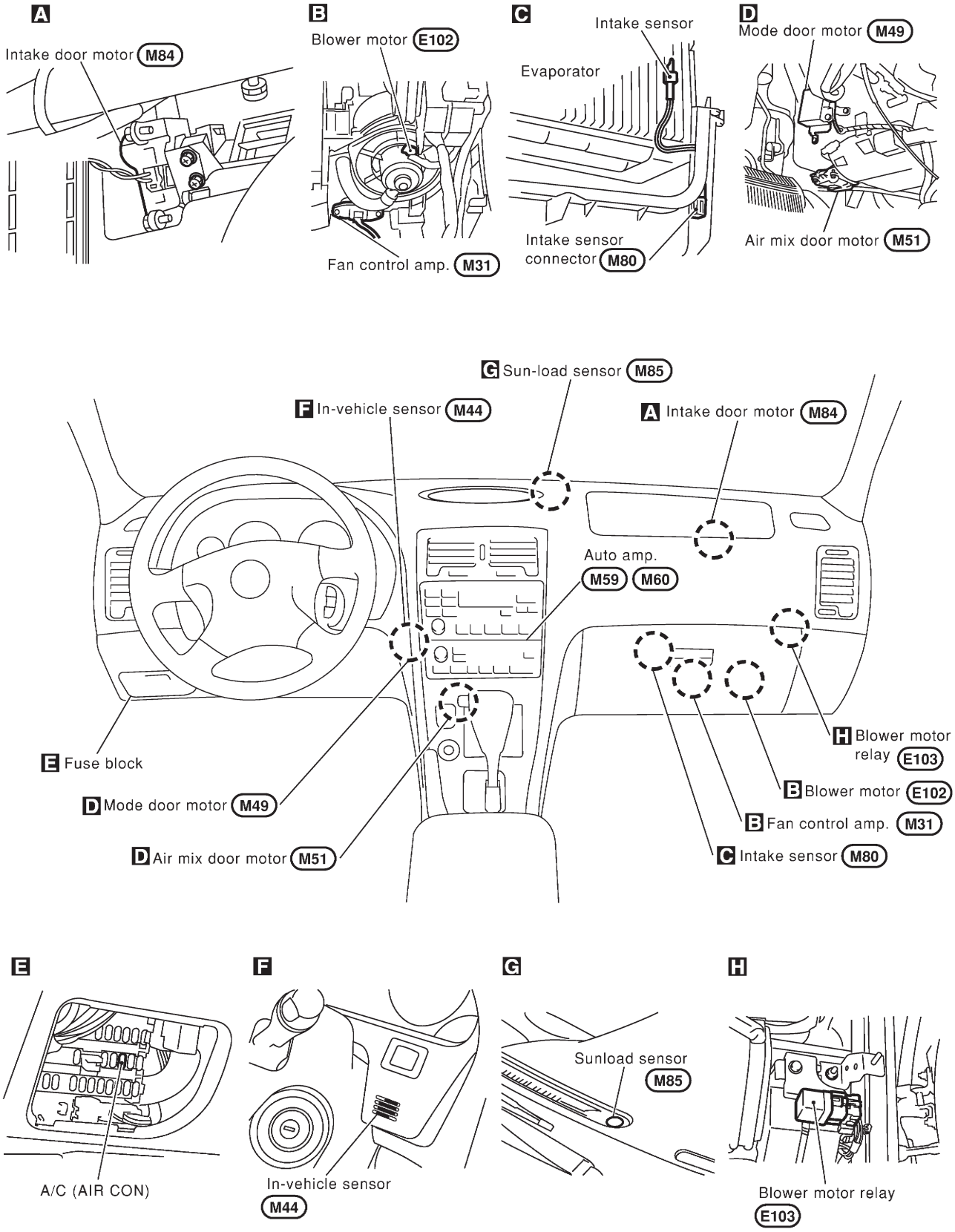

This illustration is for LHD models.
The layout for RHD models is symmetrically opposite.

RHA454HA

Circuit Diagram

NFHA0173

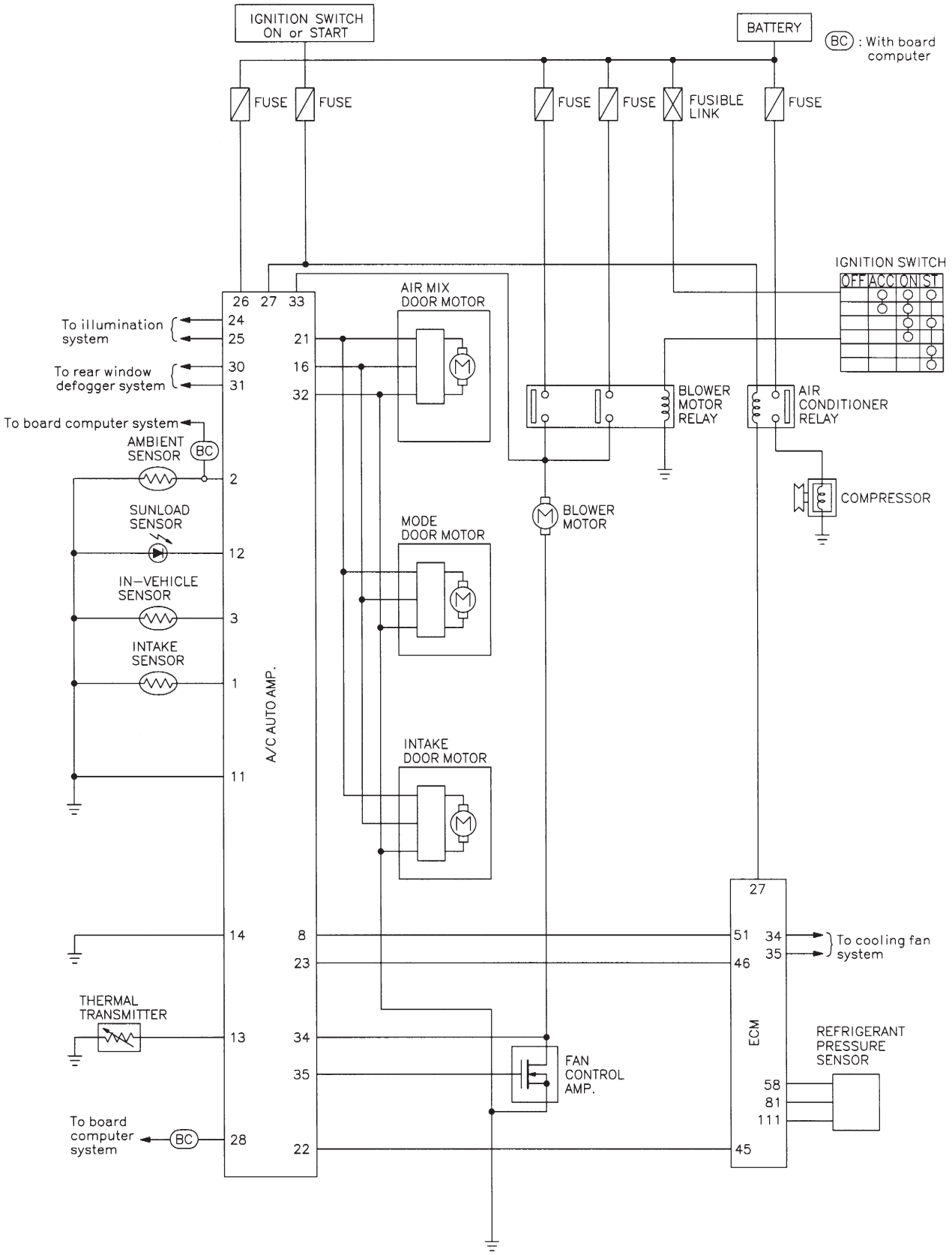

MHA970A

Wiring Diagram — A/C, A —

NFHA0174

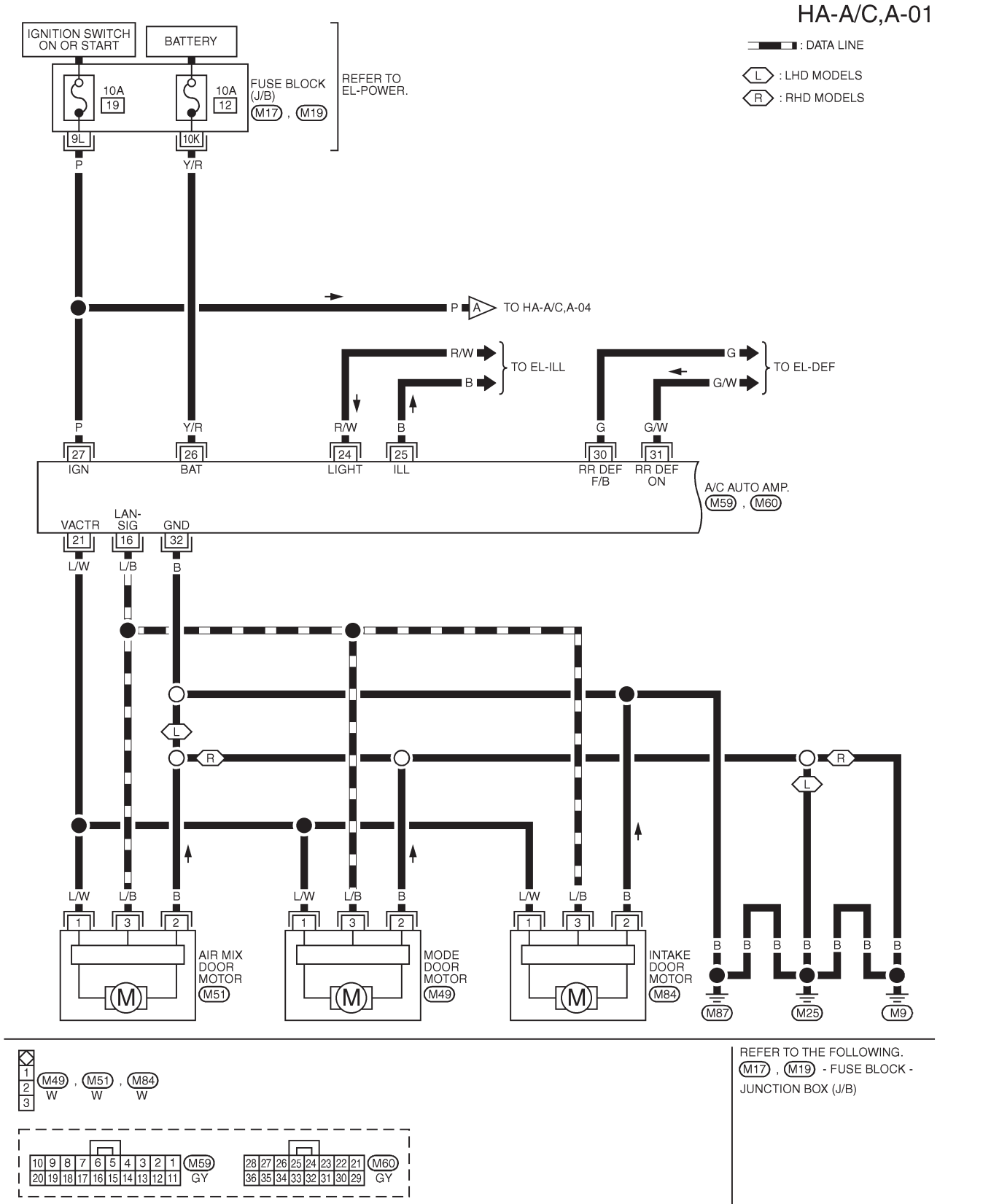

REFER TO THE FOLLOWING.
M17 , M19 - FUSE BLOCK - JUNCTION BOX (J/B)

MHA995A

LHD MODELS

=NFHA0174S01

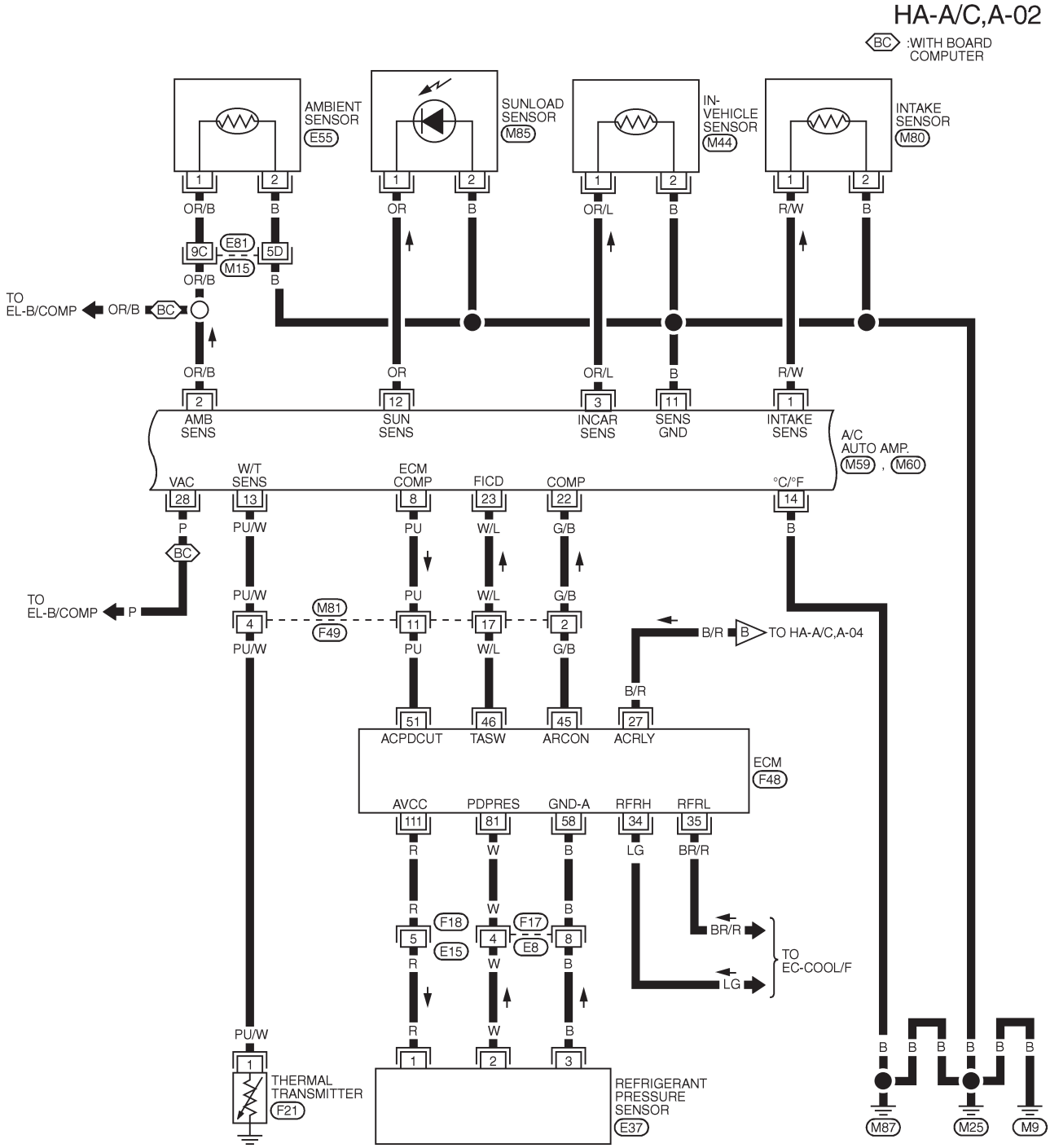

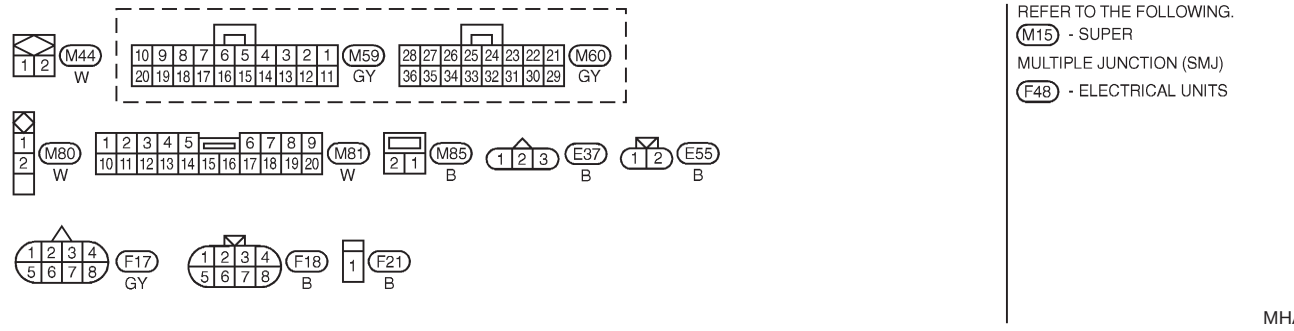

REFER TO THE FOLLOWING.
M15 - SUPER MULTIPLE JUNCTION (SMJ)
F48 - ELECTRICAL UNITS

MHA971A

RHD MODELS

=NFHA0174S02

HA-A/C,A-03

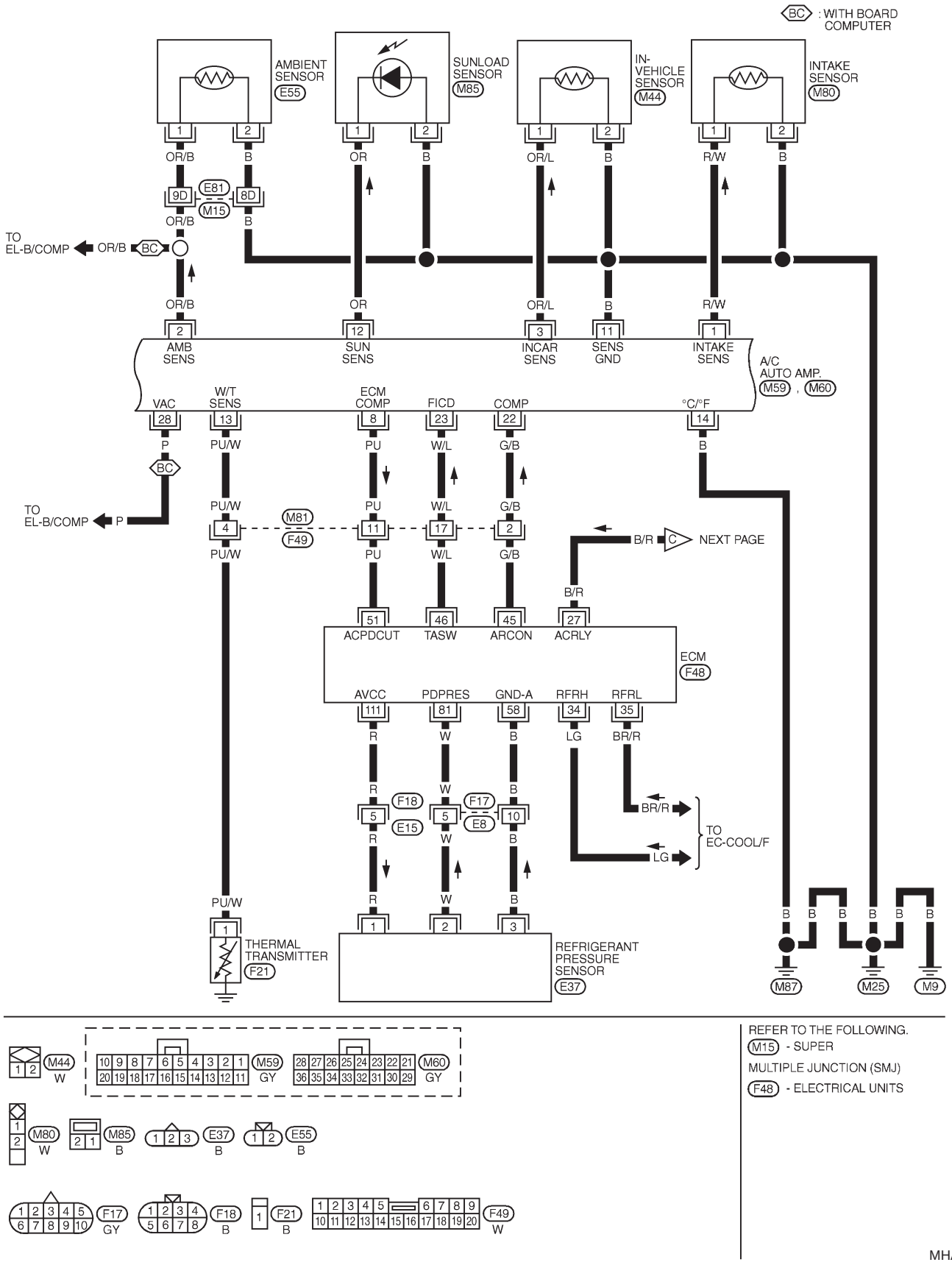

HA-A/C,A-04

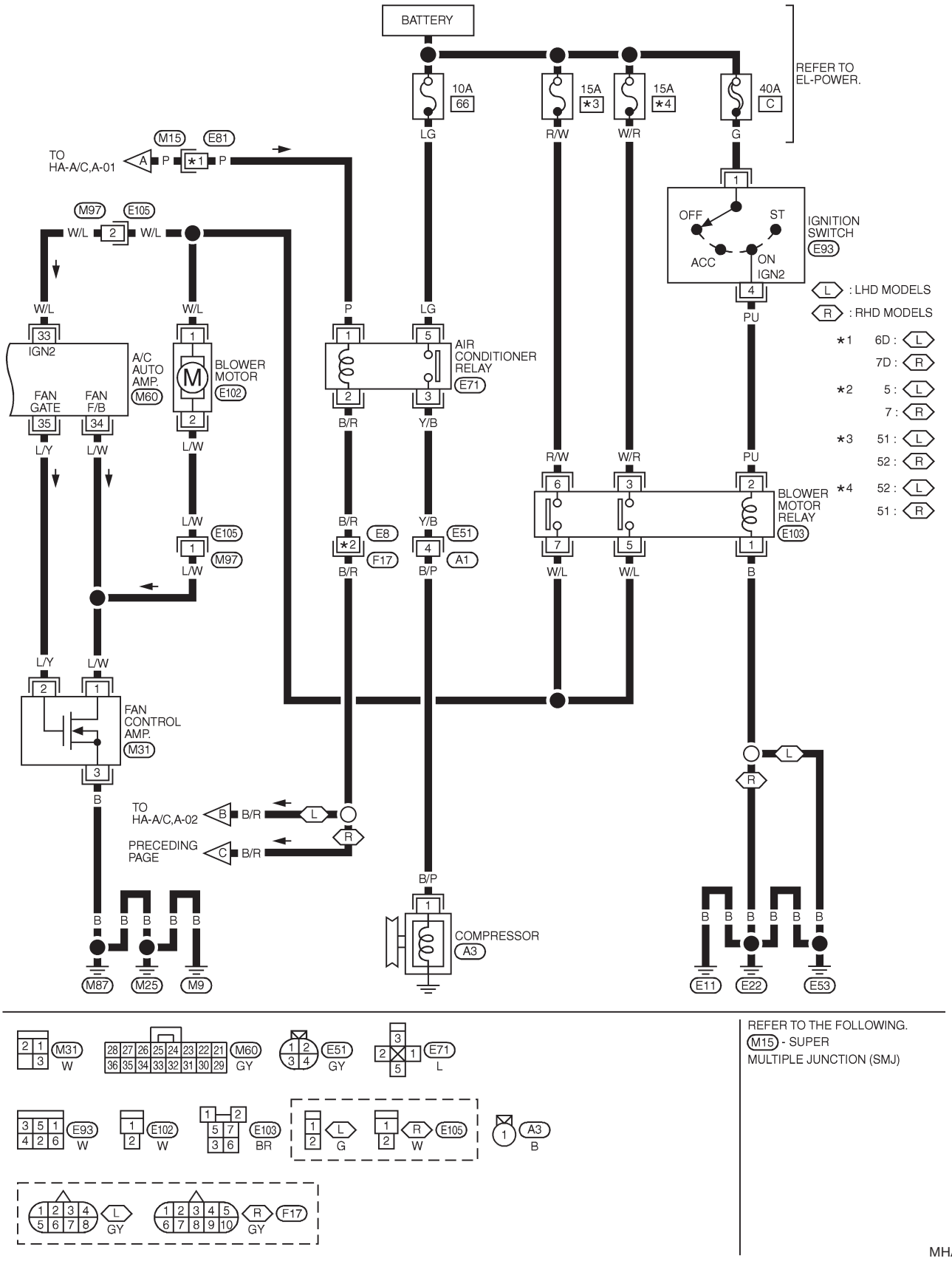
BATTERY
10A 66
15A *3
15A *4
40A C
REFER TO EL-POWER.
LG
R/W
W/R
G
TO HA-A/C,A-01
M15
E81
A
P
*1
P
M97
E105
W/L
2
W/L
OFF
ST
ACC
ON IGN2
IGNITION SWITCH
E93
L : LHD MODELS
R : RHD MODELS
*1 6D : L
7D : R
*2 5 : L
7 : R
*3 51 : L
52 : R
*4 52 : L
51 : R
PU
W/L
33
IGN2
A/C AUTO AMP.
M60
FAN GATE
FAN F/B
35
34
L/Y
L/W
W/L
BLOWER MOTOR
E102
L/W
P
LG
AIR CONDITIONER RELAY
E71
B/R
Y/B
R/W
W/R
PU
BLOWER MOTOR RELAY
E103
B/R
E8
F17
Y/B
E51
A1
B/P
W/L
W/L
B
L/W
E105
M97
L/Y
L/W
FAN CONTROL AMP.
M31
B
TO HA-A/C,A-02
B
B/R
L
R
PRECEDING PAGE
C
B/R
B/P
COMPRESSOR
A3
B B B B B
M87
M25
M9
E11
E22
E53
M31 W
M60 GY
E51 GY
E71 L
E93 W
E102 W
E103 BR
L G
R W
E105
A3 B
L GY
R GY
F17
REFER TO THE FOLLOWING.
M15 - SUPER MULTIPLE JUNCTION (SMJ)
MHA945A

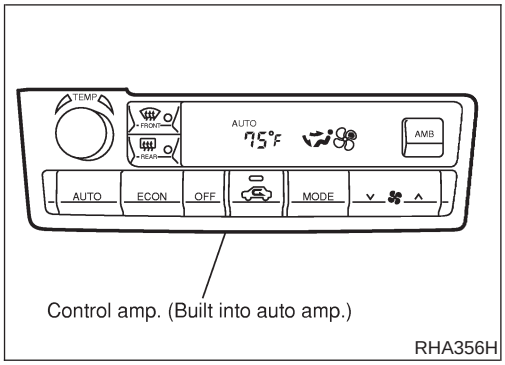

Auto Amp. Terminals and Reference Value

NFHA0175

INSPECTION OF AUTO AMP.

NFHA0175S01

- Measure voltage between each terminal and body ground by following “AUTO AMP. INSPECTION TABLE”.

- Pin connector terminal layout

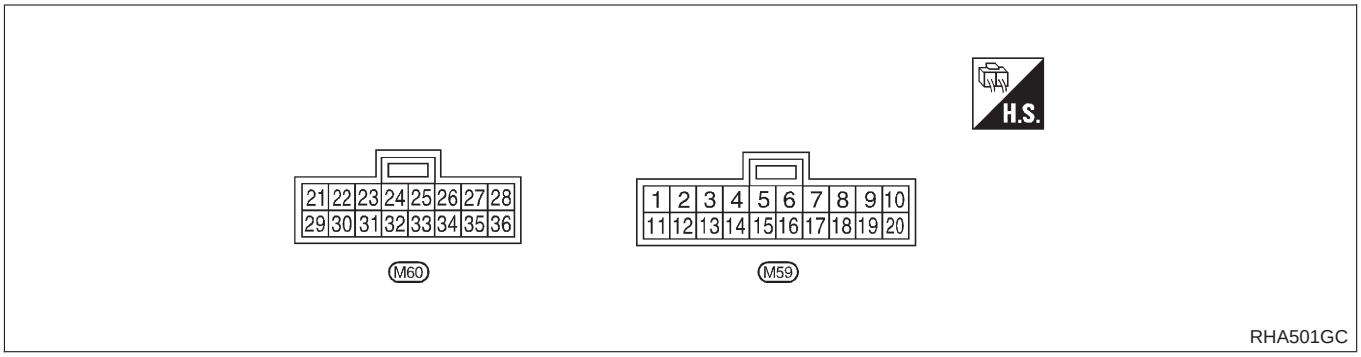

AUTO AMP. INSPECTION TABLE

NFHA0175S02

TERMINAL NO.	ITEM	CONDITION			Voltage V
1	Intake sensor	—			—
2	Ambient sensor	—			—
3	In-vehicle sensor	—			—
8	ECM COMP	ON	Compressor ON		Approximately 0
			Compressor OFF		Approximately 4.6
11	Sensor ground		—		Approximately 0
12	Sunload sensor	—			—
13	Thermal transmitter	ON	Engine coolant temperature	Approximately 40°C (104°F)	Approximately 10.8
				Approximately 55°C (131°F)	Approximately 9.9
				Approximately 60°C (140°F)	Approximately 9.5
14	Ground		—		Approximately 0
16	A/C LAN signal		—		Approximately 5.5
21	Power supply for mode door motor, intake door motor and air mix door motor		—		Approximately 12
22	Compressor ON signal		Compressor	ON	Approximately 0
				OFF	Approximately 4.6
26	Power supply for BAT	OFF	—		BATTERY VOLTAGE

TERMINAL NO.	ITEM	CONDITION			Voltage V
27	Power supply for IGN		—		Approximately 12
28	Ambient temperature signal (With board computer)		—		Approximately 4.5
30	Rear window defogger feed back		Rear window defogger switch	ON	Approximately 12
				OFF	Approximately 0
31	Rear window defogger ON signal		Rear window defogger switch	ON	Approximately 0
				OFF	Approximately 12
32	Ground		—		Approximately 0
33	Power source for A/C		Ignition voltage feed back		Approximately 12
34	Blower motor feed back		Fan speed: Low		Approximately 7 - 10
35	Fan control AMP. control signal		Fan speed	Low, Middle low or Middle high	Approximately 2.5 - 3.0
				High	Approximately 9 - 10

Self-diagnosis

=NFHA0176

INTRODUCTION AND GENERAL DESCRIPTION

NFHA0176S01

The self-diagnostic system diagnoses sensors, door motors, blower motor, etc. by system line. Refer to applicable sections (items) for details. Shifting from normal control to the self-diagnostic system is accomplished by starting the engine (turning the ignition switch from “OFF” to “ON”) and pressing “ OFF ” switch for at least 5 seconds. The “ OFF ” switch must be pressed within 10 seconds after starting the engine (ignition switch is turned “ON”). This system will be canceled by either pressing AUTO (AUTO) switch or turning the ignition switch “OFF”. Shifting from one step to another is accomplished by means of pushing TEMP dial right turn or TEMP dial left turn switch, as required.
Additionally shifting from STEP 5 to AUXILIARY MECHANISM is accomplished by means of pushing (fan) UP switch.

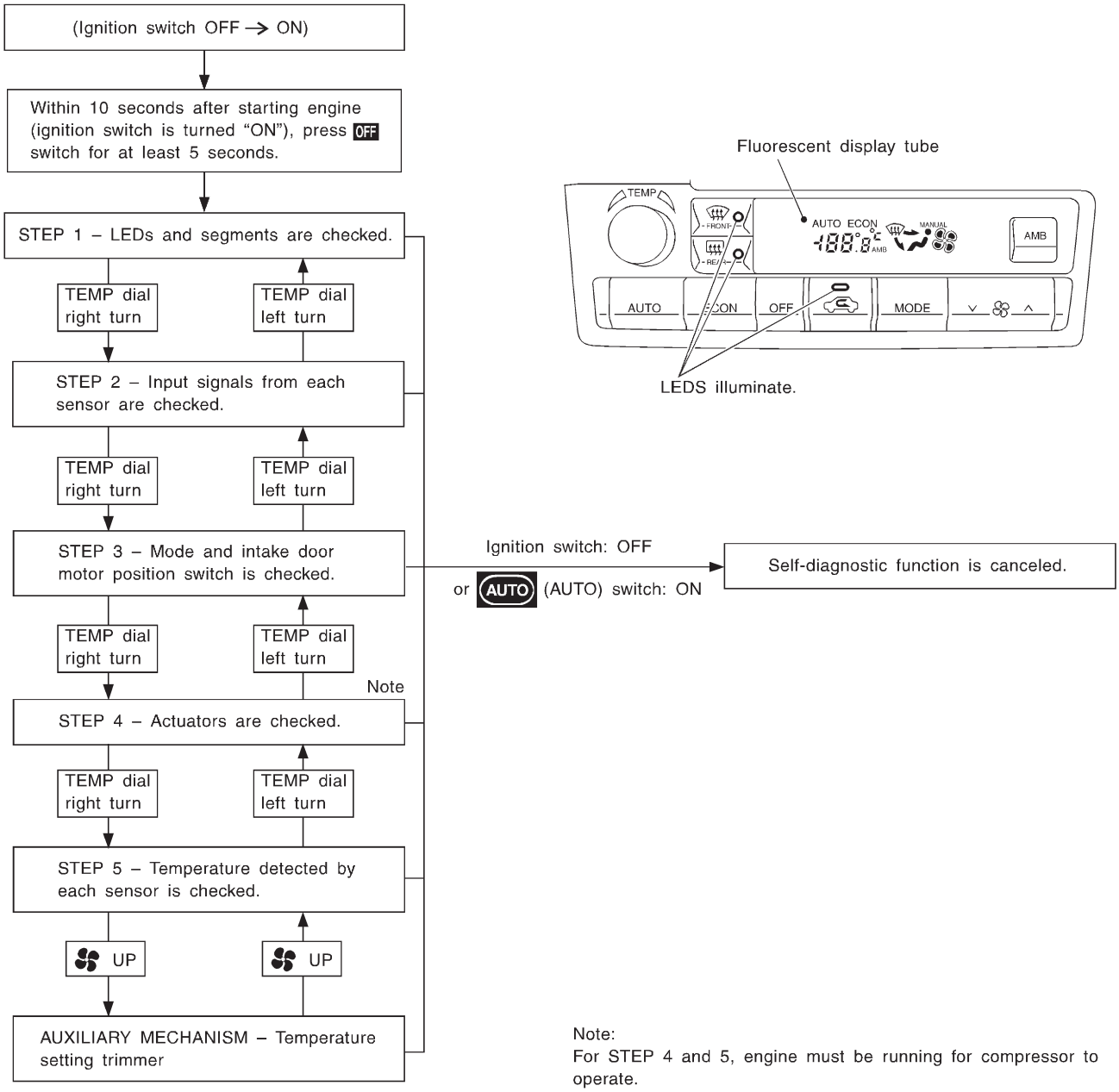

Perform all of the following tests to narrow the problem to a specific assembly, actuator, or function.
Link to the Diagnostic Procedure which corresponds to malfunctions noted in these tests.
If the A/C display screen has no display, check all power supply circuits to the A/C Auto Amp.

FUNCTION CONFIRMATION PROCEDURE

NFHA0176S02

1	ENTER SELF-DIAGNOSTIC MODE
Perform steps 1 - 3 1. Turn the ignition OFF. 2. Start the engine. 3. Immediately after starting the engine press and hold the OFF switch (for the auto A/C system) for at least 5 seconds. The A/C Auto Amp. should now be in Self Diagnosis mode. Self Diagnosis steps 1 - 5 can now be performed. Self Diagnosis step 1 will be displayed first. Shifting from one step to another is accomplished by pressing the temperature increase or decrease switch.	
▶	GO TO 2.

2	STEP 1 LED/DISPLAY CHECK
Verify all segments illuminate. If all segments do not illuminate the fluorescent display tube is malfunctioning or the system has not entered self diagnosis which would indicate a malfunctioning OFF switch. Do all LEDs and segments illuminate?	

Display malfunction

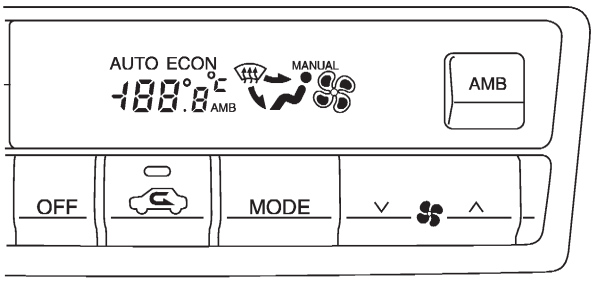

RHA358H

Yes or No

Yes	▶	GO TO 3.
No	▶	Malfunctioning OFF switch, LED or fluorescent display tube. Replace A/C auto amp.

3	CHECK TO ADVANCE SELF-DIAGNOSIS STEP 2
1. Turn the TEMP dial clockwise. 2. Advance to self-diagnosis STEP 2. If the system does not shift between step 1 and 2 a malfunctioning TEMP dial is indicated.	

Yes or No

Yes	▶	GO TO 4.
No	▶	Malfunctioning TEMP dial. Replace A/C auto amp.

4	CHECK TO RETURN SELF-DIAGNOSIS STEP 1

1. Turn the TEMP dial counterclockwise.
2. Return to self-diagnosis STEP 1.

If the system does not shift between step 1 and 2 a malfunctioning TEMP dial is indicated.

Yes or No

Yes	▶	GO TO 5.
No	▶	Malfunctioning TEMP dial. Replace A/C auto amp.

5	STEP 2 - SENSOR CIRCUITS ARE CHECKED FOR OPEN OR SHORT CIRCUIT

Turn the TEMP dial clockwise, advance to STEP 2: Wait (about 25 seconds) for two digit Code to appear.
This is the Electronic Sensor Input Check which includes circuits.
Does code No. 20 appear on the display?

Display (when all sensors are in good order)

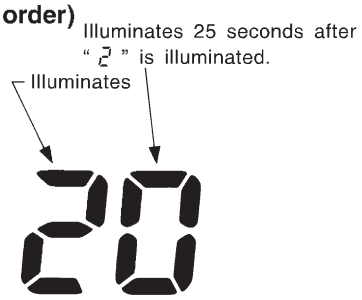

RHA970DB

Yes or No

Yes	▶	GO TO 6.
No	▶	GO TO 13.

6	STEP 3 - MODE DOOR AND INTAKE DOOR POSITIONS ARE CHECKED

Turn the TEMP dial clockwise, advance to STEP 3. Wait (about 50 seconds) for two digit Code to appear.
This is the Mode Door and Intake Door Position Switch input checks including circuits.
Does code No. 30 appear on the display?

Display (when all doors are in good order)

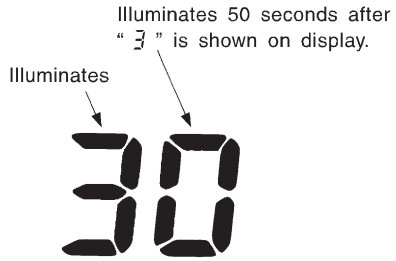

RHA869DD

Yes or No

Yes	▶	GO TO 7.
No	▶	GO TO 14.

7	STEP 4 - OPERATION OF EACH ACTUATOR IS CHECKED
Turn the TEMP dial clockwise, advance to STEP 4. Engine running. This is Heater and A/C system check. Code 41 will be displayed. Use the DEF switch to advance the code number from 41 to 46. After 46, the display will return to code 41 and can be advanced to 46 again. 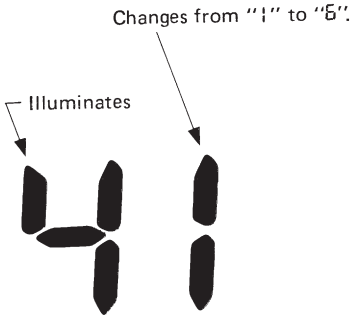 RHA495A	
▶	GO TO 8.

8	CHECK ACTUATORS

Confirm operation of system components according to the following charts.
Checks must be made visually, by listening to any noise, or by touching air outlets with your hand, etc. for improper operation.

Code No. / Actuator	41	42	43	44	45	46
Mode door	VENT	B/L	B/L	FOOT	D/F	DEF
Intake door	REC	REC	20% FRE	FRE	FRE	FRE
Air mix door	Full Cold	Full Cold	Full Hot	Full Hot	Full Hot	Full Hot
Blower motor	4.5 V	10.5 V	8.5 V	8.5 V	8.5 V	12 V
Compressor	ON	ON	OFF	OFF	ON	ON

MTBL0394

Operating condition of each actuator cannot be checked by indicators.

Discharge air flow

Mode switch	Air outlet/distribution		
	Face	Foot	Defroster
	100%	—	—
	60%	40%	—
	—	80%	20%
	—	60%	40%
	—	—	100%

MTBL0128

OK or NG

OK ▶	GO TO 9.
NG ▶	● Air outlet does not change. Go to "Mode Door Motor" (HA-56). ● Intake door does not change. Go to "Intake Door Motor" (HA-65). ● Blower motor operation is malfunctioning. Go to "Blower Motor" (HA-68). ● Magnet clutch does not engage. Go to "Magnet Clutch" (HA-76). ● Discharge air temperature does not change. Go to "Air Mix Door Motor" (HA-62).

9	STEP 5 - TEMPERATURE OF EACH SENSOR IS CHECKED

Turn the TEMP dial clockwise, advance to STEP 5. This is Intake sensor, In Vehicle sensor and Ambient Sensor function check. Code 51 will be displayed.

NOTE:

Each sensor reading should be approximately the actual temperature.

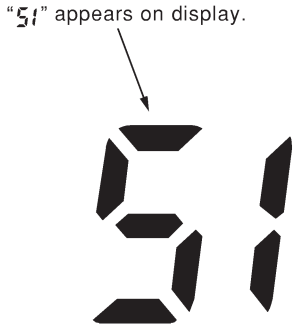

RHA359H

	▶	GO TO 10.

10	CHECK AMBIENT SENSOR

Press DEF once, temperature detected by the Ambient Sensor is displayed.

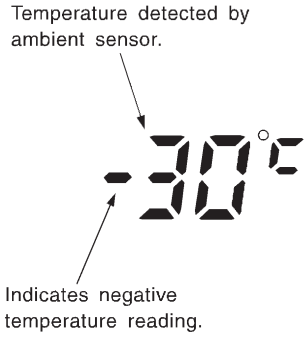

RHA551H

OK or NG

OK	▶	GO TO 11.
NG	▶	Go to Ambient Sensor Circuit (HA-94).

11	CHECK IN-VEHICLE SENSOR

Press DEF second time, temperature detected by the In Vehicle Sensor is displayed.

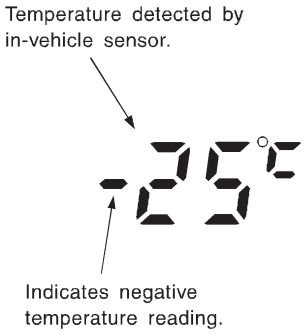

RHA552H

OK or NG

OK	▶	GO TO 12.
NG	▶	Go to In-vehicle Sensor Circuit (HA-97).

12	CHECK INTAKE SENSOR
Press DEF third time, temperature detected by the Intake Sensor is displayed.	

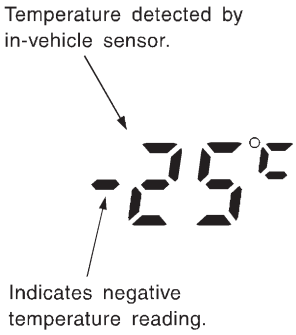

RHA553H

OK or NG

OK	▶	1. Press (DEF) switch the fourth time. Display returns to original presentation 51. 2. Turn ignition switch OFF or (AUTO) switch ON. 3. END
NG	▶	Go to Intake Sensor Circuit (HA-104).

13	CHECK MALFUNCTIONING SENSOR

NOTE:

- A blinking mark (-) preceding the Code No. indicates a short circuit.
- If 2 or more items are malfunctioning the corresponding codes will alternately blink twice.
- A circuit will be detected as open or shorted and its code No. will be displayed when input signals correspond with conditions in the following chart.

Code No.	Sensor	Open circuit	Short circuit	Reference page
21 -21	Ambient sensor	Less than –43.8°C (–47°F)	Greater than 100°C (212°F)	*3
22 -22	In-vehicle sensor	Less than –43.8°C (–47°F)	Greater than 100°C (212°F)	*4
24 -24	Intake sensor	Less than –43.8°C (–47°F)	Greater than 100°C (212°F)	*5
25 -25	Sunload sensor*2	Less than 0.228 mA	Greater than 0.98 mA	*6
26 -26	PBR*1	Greater than 95%	Less than 5%	*7

MTBL0401

*1: "95%" and "5%" refer to percentage with respect to stroke of air mix door. (Full cold: 0%, Full hot: 100%)
*2: **Conduct self-diagnosis STEP 2 under sunshine.**
When conducting indoors, direct light (more than 60W) at sunload sensor.
*3: HA-94, *4: HA-97, *5: HA-104, *6: HA-101, *7: HA-107

Display (when sensor malfunctions)

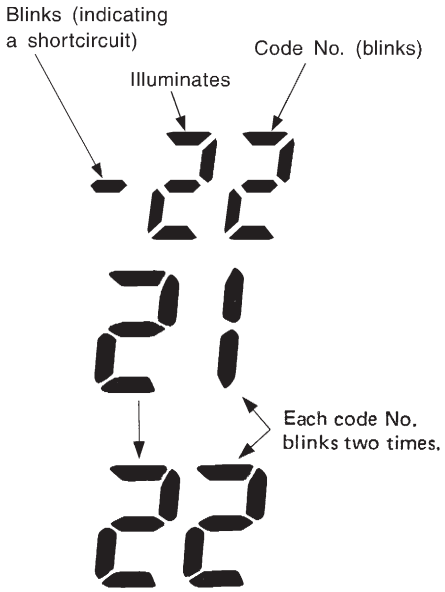

RHA455G

RHA501A

▶	INSPECTION END

14	CHECK MALFUNCTIONING DOOR MOTOR POSITION SWITCH

30- Mode door and intake door position switches are in working order.
Continue to next step.
31- Mode door circuit / switch in vent position switch is malfunctioning.
32- Mode door circuit / switch in B/L position switch is malfunctioning.
34- Mode door circuit / switch in Foot position switch is malfunctioning.
35- Mode door circuit / switch in Foot Def. position switch is malfunctioning.
36- Mode door circuit / switch in Def. position switch is malfunctioning.
37- Intake door mode circuit / switch in Fresh Air position is malfunctioning.
38- Intake door mode circuit / switch in 20% Fresh Air position is malfunctioning.
39- Intake door mode circuit / switch in Recirculation Air position is malfunctioning.

NOTE:

- If 2 or more items are malfunctioning the corresponding codes will alternately blink twice.
- If the Mode Door Motor harness is disconnected repeated display pattern of 31 → 32 → 34 → 35 → 36 will occur.
- If Intake Door Motor harness is disconnected repeated display pattern of 37 → 38 → 39 will occur.
- If any Mode Door Motor Position Switch is malfunctioning the Mode Door Motor will also malfunction.

Display (when a door is out of order)

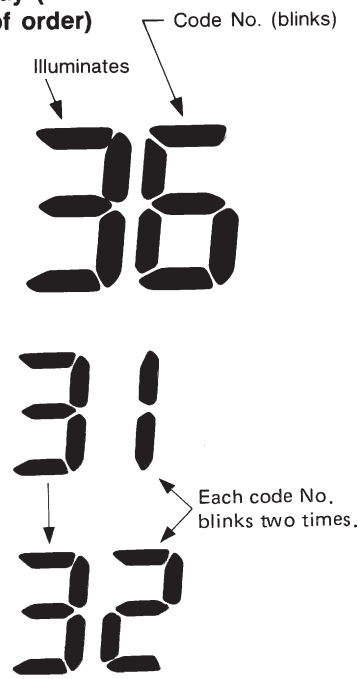

RHA168DA

RHA498A

▶	INSPECTION END

AUXILIARY MECHANISM: TEMPERATURE SETTING TRIMMER

=NFHA0176S03

Unconfirmed Incidents

NFHA0176S0301

The customer may feel that the cabin temperature is not being controlled or regulated to the temperature indicated by the auto A/C display screen. To satisfy individual driver preference the Temperature Setting Trimmer may be used to compensate in a range of ±3°C (±6°F).

1. Enter Self Diagnosis mode and select STEP 5.
2. Press the Fan Up switch: This will set the A/C system in auxiliary mode and the display will show 61.
3. Turn the temperature dial clockwise or counterclockwise: The temperature will change at a rate of 0.5°C (1°F).

If power is lost to the A/C Auto Amp., trimmer setting is canceled and setting becomes that of initial condition, 0°.

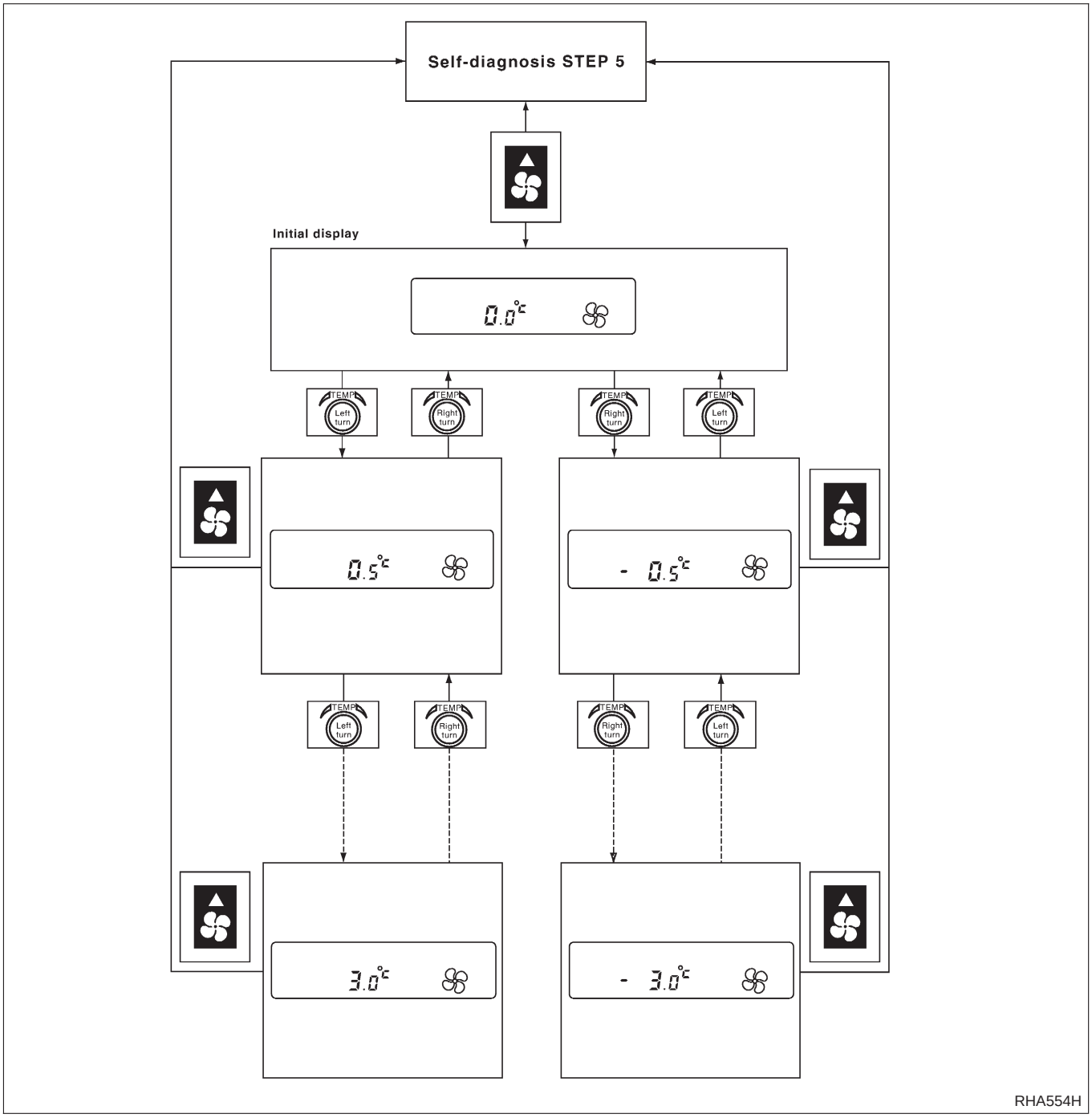

When battery cable is disconnected, trimmer operation is canceled. Temperature set becomes that of initial condition, i.e. 0°C (0°F).

How to Perform Trouble Diagnoses for Quick and Accurate Repair

=NFHA0177

WORK FLOW

NFHA0177S01

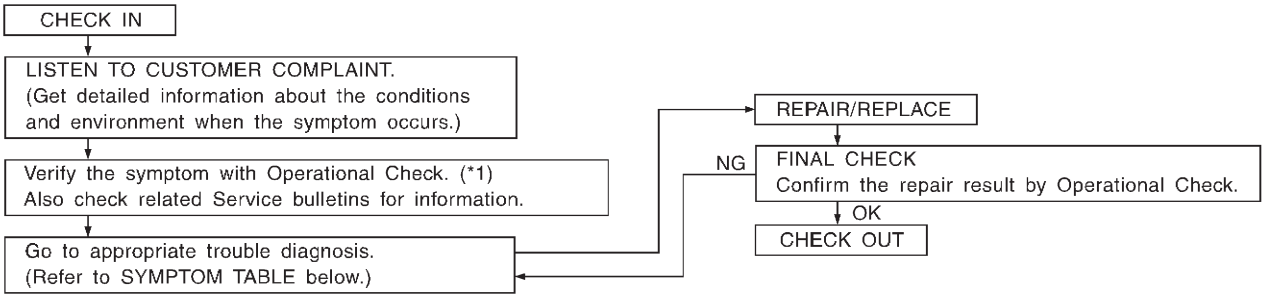

SHA900E

*1: Operational Check (HA-49)

SYMPTOM TABLE

NFHA0177S02

Symptom	Reference Page	
● A/C system does not come on.	● Go to Trouble Diagnosis Procedure for A/C system.	HA-53
● Air outlet does not change. ● Mode door motor does not operate normally.	● Go to Trouble Diagnosis Procedure for Mode Door Motor. (LAN)	HA-56
● Discharge air temperature does not change. ● Air mix door motor does not operate normally.	● Go to Trouble Diagnosis Procedure for Air Mix Door Motor. (LAN)	HA-62
● Intake door does not change. ● Intake door motor does not operate normally.	● Go to Trouble Diagnosis Procedure for Intake Door Motor. (LAN)	HA-65
● Blower motor operation is malfunctioning. ● Blower motor operation is malfunctioning under out of starting fan speed control.	● Go to Trouble Diagnosis Procedure for Blower Motor.	HA-68
● Magnet clutch does not engage.	● Go to Trouble Diagnosis Procedure for Magnet Clutch.	HA-76
● Insufficient cooling.	● Go to Trouble Diagnosis Procedure for Insufficient Cooling.	HA-82
● Insufficient heating.	● Go to Trouble Diagnosis Procedure for Insufficient Heating.	HA-90
● Noise.	● Go to Trouble Diagnosis Procedure for Noise.	HA-91
● Self-diagnosis can not be performed.	● Go to Trouble Diagnosis Procedure for Self-diagnosis.	HA-92
● Memory function does not operate.	● Go to Trouble Diagnosis Procedure for Memory Function.	HA-93
● ECON mode does not operate.	● Go to Trouble Diagnosis Procedure for ECON (ECONOMY) — mode.	HA-94

Operational Check

NFHA0178

The purpose of the operational check is to confirm that the system operates properly.

CONDITIONS:

NFHA0178S01

- **Engine running and at normal operating temperature.**

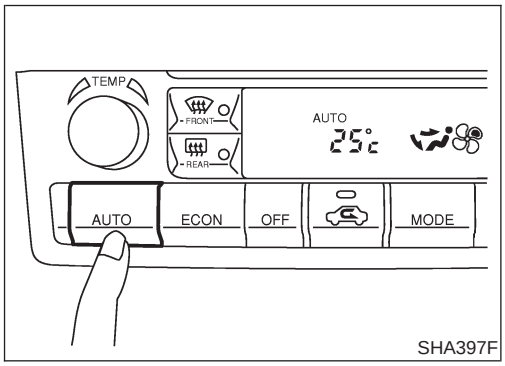

SHA397F

PROCEDURE:

NFHA0178S02

1. Check Memory Function

NFHA0178S0201

1. Set the temperature 75°F or 25°C.
2. Press OFF switch.
3. Turn the ignition off.
4. Turn the ignition on.
5. Press the AUTO switch.
6. Confirm that the set temperature remains at previous temperature.
7. Press OFF switch.

If NG, go to trouble diagnosis procedure for memory function (HA-93).
If OK, continue with next check.

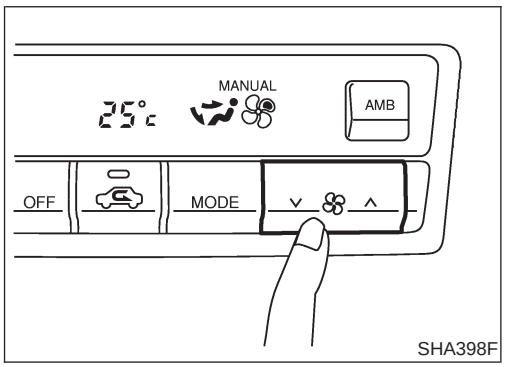

SHA398F

2. Check Blower

NFHA0178S0202

1. Press fan switch (up side) one time.
   Blower should operate on low speed.
   The fan symbol should have one blade lit .
2. Press fan switch (up side) one more time, and continue checking blower speed and fan symbol until all speeds are checked.
3. Leave blower on MAX speed .

If NG, go to trouble diagnosis procedure for blower motor (HA-68).
If OK, continue with next check.

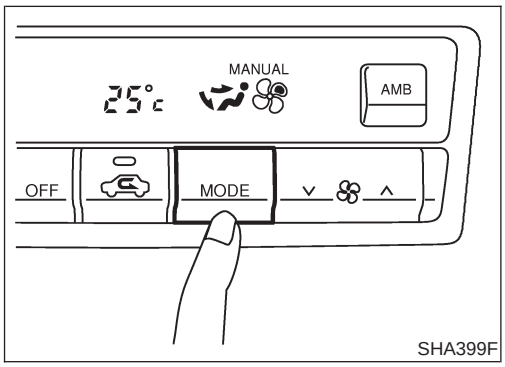

SHA399F

3. Check Discharge Air

NFHA0178S0203

1. Press mode switch four times and DEF button.
2. Each position indicator should change shape.

Discharge air flow

Mode control knob	Air outlet/distribution		
	Face	Foot	Defroster
	100%	–	–
	60%	40%	–
	–	80%	20%
	–	60%	40%
	–	–	100%

RHA654F

3. Confirm that discharge air comes out according to the air distribution table at left.
   Refer to "Discharge Air Flow" (HA-26).

NOTE:
Confirm that the compressor clutch is engaged (visual inspection) and intake door position is at FRESH when the DEF is selected.

Intake door position is checked in the next step.
If NG, go to trouble diagnosis procedure for mode door motor (HA-56).
If OK, continue with next check.

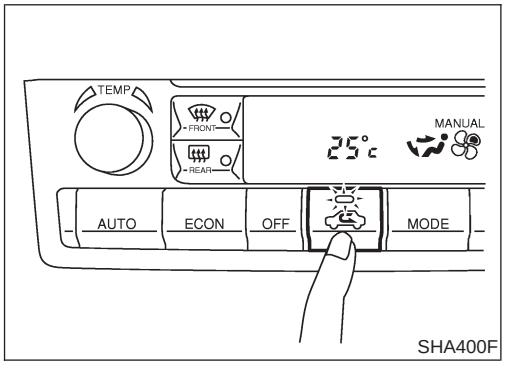

SHA400F

4. Check Recirculation

NFHA0178S0204

1. Press REC switch.
   Recirculation indicator should illuminate.
2. Listen for intake door position change (you should hear blower sound change slightly).

If NG, go to trouble diagnosis procedure for intake door (HA-65).
If OK, continue with next check.

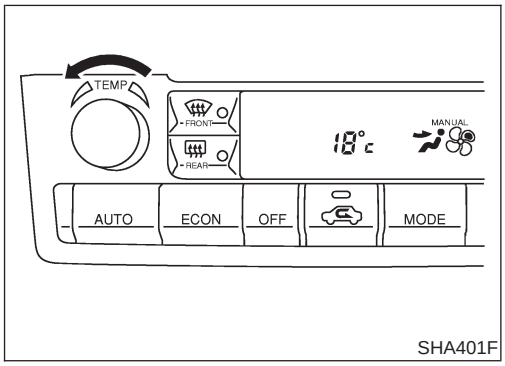

SHA401F

5. Check Temperature Decrease

NFHA0178S0205

1. Turn the temperature dial counterclockwise until 18°C (65°F) is displayed.
2. Check for cold air at discharge air outlets.

If NG, go to trouble diagnosis procedure for insufficient cooling (HA-82).
If OK, continue with next check.

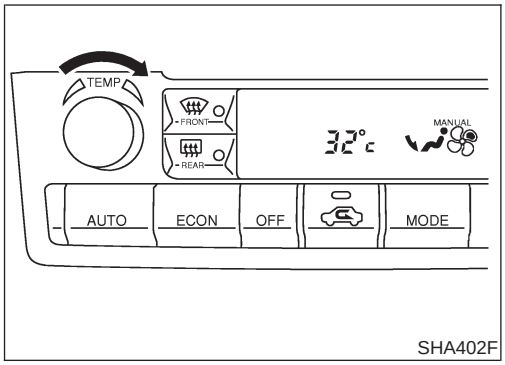

SHA402F

6. Check Temperature Increase

NFHA0178S0206

1. Turn the temperature dial clockwise until 32°C (85°F) is displayed.
2. Check for hot air at discharge air outlets.

If NG, go to trouble diagnosis procedure for insufficient heating (HA-90).
If OK, continue with next check.

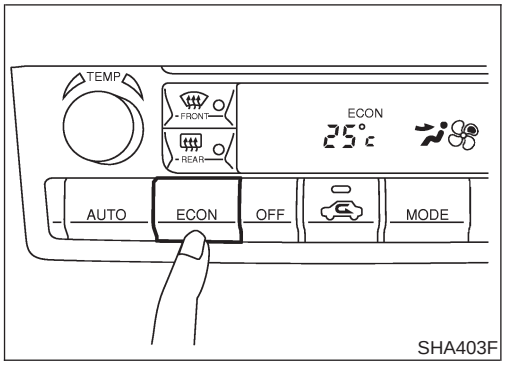

SHA403F

7. Check ECON (Economy) Mode

NFHA0178S0207

1. Set the temperature 75°F or 25°C.
2. Press ECON switch.
3. Display should indicate ECON (no AUTO).
   Confirm that the compressor clutch is not engaged (visual inspection).
   (Discharge air and blower speed will depend on ambient, in-vehicle and set temperatures.)

If NG, go to trouble diagnosis procedure for ECON (Economy) mode (HA-94).
If OK, continue with next check.

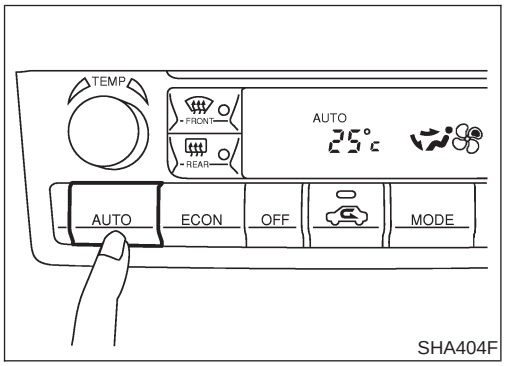

SHA404F

8. Check AUTO Mode

NFHA0178S0208

1. Press AUTO switch.
2. Display should indicate AUTO (no ECON).
   Confirm that the compressor clutch engages (audio or visual inspection).
   (Discharge air and blower speed will depend on ambient, in-vehicle and set temperatures.)

If NG, go to trouble diagnosis procedure for A/C system (HA-53), then if necessary, trouble diagnosis procedure for magnet clutch (HA-76).
If OK, continue with next check.

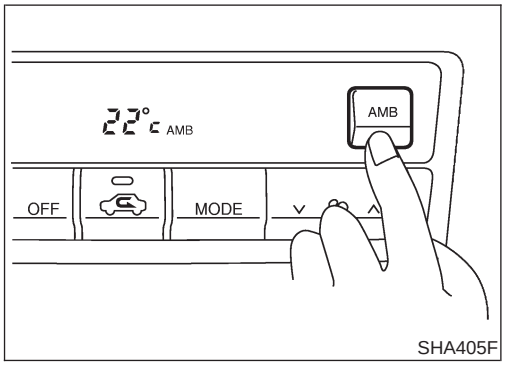

SHA405F

9. Check Ambient Display

NFHA0178S0209

1. Press AMB switch.
2. Display should show the outside (ambient) temperature for approximately 5 seconds.

If NG, go to trouble diagnosis procedure for ambient sensor (HA-95).
If OK, continue with next check.

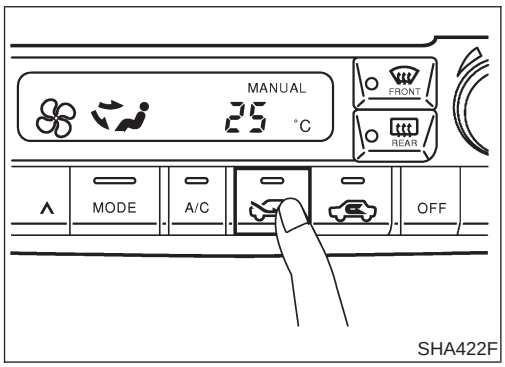

SHA422F

10. Check Fresh (FRE) Switch (RHD Models)

NFHA0178S0210

1. Press FRE switch.
   Fresh indicator should illuminate.
2. Listen for intake door position change (you should hear blower sound change slightly).

If NG, go to trouble diagnosis procedure for intake door (HA-65).
If OK, continue with next check.

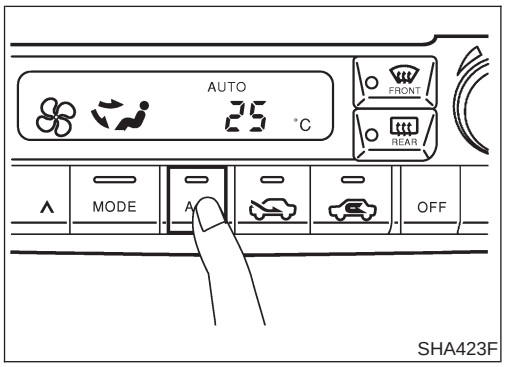

SHA423F

11. Check Air Conditioner (A/C) Siwtch (RHD Models)

NFHA0178S0211

1. Press AUTO switch.
2. Press A/C switch.
   A/C indicator will turn OFF.
3. Press A/C switch.
   A/C indicator should illuminate and compressor will turn ON.

If all operational check are OK (symptom cannot be duplicated), go to "Incident Simulation Tests" (GI section) and perform tests as outlined to simulate driving conditions environment. If symptom appears, refer to "Symptom Table" (HA-48) and perform applicable trouble diagnosis procedures.

A/C System

TROUBLE DIAGNOSIS PROCEDURE FOR A/C SYSTEM

=NFHA0179

SYMPTOM:

- **A/C system does not come on.**

INSPECTION FLOW

1. Confirm symptom by performing the following operational check.

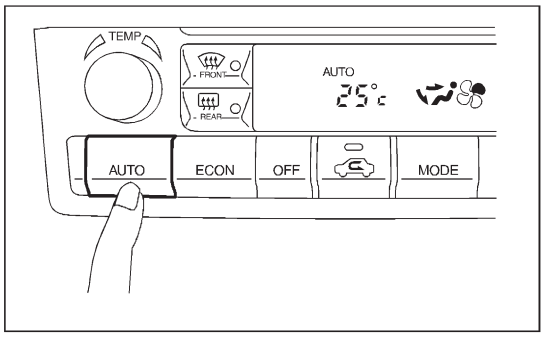

OPERATIONAL CHECK – AUTO mode

a. Press AUTO switch.
b. Display should indicate AUTO (not ECON).
Confirm that the compressor clutch engages (audio or visual inspection).
(Discharge air and blower speed will depend on ambient, in-vehicle, and temperatures switch.)

If OK (symptom cannot be duplicated), perform complete operational check (*2).
If NG (symptom is confirmed), continue with STEP-2 following.

2. Check for any service bulletins. → 3. Check Main Power Supply and Ground Circuit. (*1)
3. → OK → Go to A/C System Circuit. (*3) → OK → 4. Replace auto amp.

SHA406F

*1: HA-54 *2: HA-49 *3: HA-54

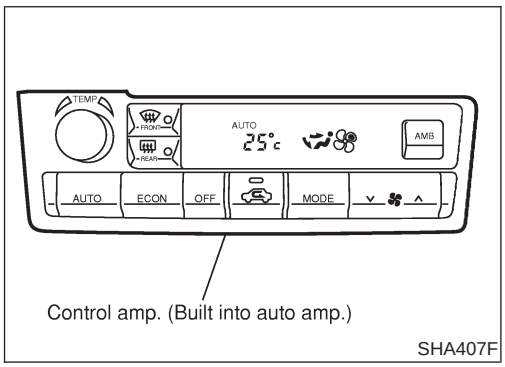

SHA407F

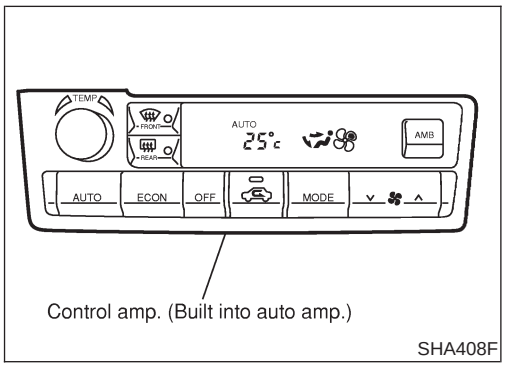

SHA408F

COMPONENT DESCRIPTION

NFHA0247

Automatic Amplifier (Auto Amp.)

NFHA0247S01

The auto amplifier has a built-in microcomputer which processes information sent from various sensors needed for air conditioner operation. The mode door motor, air mix door motor, intake door motor, blower motor and compressor are then controlled.
The auto amplifier is unitized with control mechanisms. Signals from various switches and Potentio Temperature Control (PTC) are directly entered into auto amplifier.
Self-diagnostic functions are also built into auto amplifier to provide quick check of malfunctions in the auto air conditioner system.

Potentio Temperature Control (PTC)

NFHA0247S02

The PTC is built into the A/C auto amp. It can be set at an interval of 0.5°C (1.0°F) in the 18°C (65°F) to 32°C (85°F) temperature range by pushing the temperature button. The set temperature is digitally displayed.

MAIN POWER SUPPLY AND GROUND CIRCUIT CHECK

=NFHA0180

Power Supply Circuit Check

NFHA0180S03

Check power supply circuit for air conditioner system.
Refer to *EL-10*, "Wiring Diagram — POWER —".

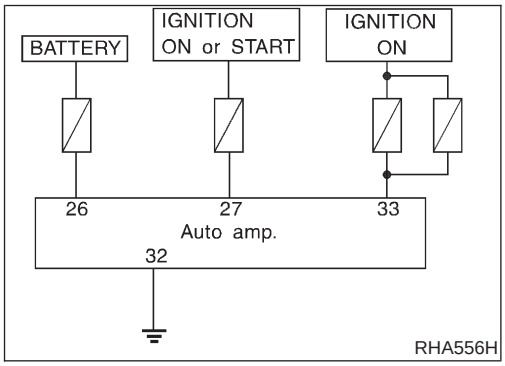

DIAGNOSTIC PROCEDURE

NFHA0181

SYMPTOM:

- **A/C system does not come on.**

1	CHECK POWER SUPPLY CIRCUIT FOR AUTO AMP.

Measure voltage across terminal Nos. 26, 27, 33 and body ground.

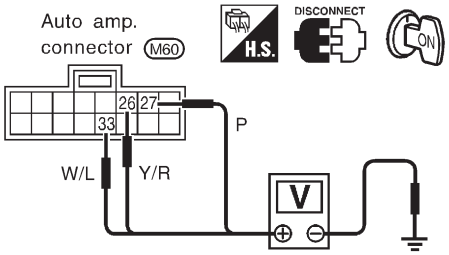

Votmeter terminal		Voltage
(+)	(–)	
26	Body ground	Approx. 12V
27		
33		

SHA319FA

OK or NG

OK	▶	GO TO 2.
NG	▶	**Check auto amp. ground circuit.** ● Check 10A fuse (Nos. 12 and 19, located in the fuse block) and 15A fuses (Nos. 51 and 52, located in the fuse block). ● If fuses are OK, check for open circuit in wiring harness. Repair or replace as necessary. ● If fuses are NG, replace fuse and check wiring harness for short circuit. Repair or replace as necessary.

2	CHECK BODY GROUND CIRCUIT FOR AUTO AMP.

Does continuity exist between auto amp. Harness terminal No. 32 and body ground?

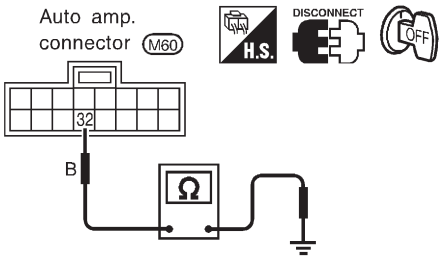

Votmeter terminal		Continuity
(+)	(–)	
32	Body ground	Yes

RHA557H

Yes or No

Yes	▶	Replace auto amp. INSPECTION END
No	▶	Repair or replace harness.

Mode Door Motor

TROUBLE DIAGNOSIS PROCEDURE FOR MODE DOOR MOTOR (LAN)

=NFHA0182

SYMPTOM:

- **Air outlet does not change.**
- **Mode door motor does not operate normally.**

INSPECTION FLOW

1. Confirm symptom by performing the following operational check.

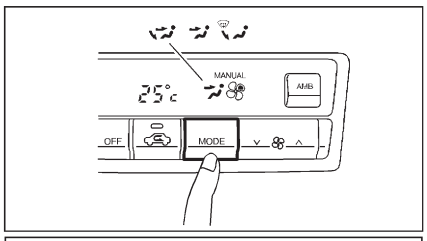

OPERATIONAL CHECK – Discharge air

a. Press mode switch four times and DEF button.
b. Each position indicator should change shape.

Discharge air flow

Mode control knob	Air outlet/distribution		
	Face	Foot	Defroster
	100%	–	–
	60%	40%	–
	–	80%	20%
	–	60%	40%
	–	–	100%

c. Confirm that discharge air comes out according to the air distribution table at left.
Refer to "Discharge Air Flow" (*1).

NOTE:

- **If OK (symptom cannot be duplicated), perform complete operational check (*2).**
  If NG (symptom is confirmed), continue with STEP-2 following.
- **Confirm that the compressor clutch is engaged (visual inspection) and intake door position is at FRESH when DEF is selected.**
  Intake door position is checked in the next step.

2. Check for any service bulletins. → 3. Perform self-diagnosis STEP-1. (*3)
4. Perform self-diagnosis STEP-2. (*4)
   - OK → 3. Perform self-diagnosis STEP-1. (*3)
   - NG → Go to appropriate malfunctioning sensor circuit. (*9)
   - OK ↓
5. Perform self-diagnosis STEP-3. (*4)
   - NG → Go to DIAGNOSTIC PROCEDURE FOR MODE DOOR MOTOR, AIR MIX DOOR MOTOR AND INTAKE DOOR MOTOR CIRCUIT. (*10)
   - OK ↓
6. Perform self-diagnosis STEP-4. (*4)
   - NG → Check mode door control linkage. (*11)
     - NG → Repair or adjust control linkage.
   - OK **[Cause cannot be confirmed by self-diagnosis.]** ↓
7. Check ambient sensor circuit. (*5)
   - OK ↓
8. Check in-vehicle sensor circuit. (*6)
   - OK ↓
9. Check sunload sensor circuit. (*7)
   - OK ↓
10. Check intake sensor circuit. (*14)
    - OK ↓
11. Check air mix door motor PBR circuit. (*8)
    - OK → If the symptom still exists, perform a complete operational check (*12) and check for other symptoms.
      [Refer to symptom table, (*13).]
      Does another symptom exist?
      - Yes → Go to Trouble Diagnosis for related symptoms. **[Another symptom exists.]**
      - No → Replace auto amp. → INSPECTION END

SHA395F

*1: HA-26
*2: HA-49
*3: HA-38
*4: HA-39
*5: HA-94
*6: HA-97
*7: HA-101
*8: HA-107
*9: FUNCTION CONFIRMATION PROCEDURE (HA-39), see No. 13.
*10: HA-58
*11: HA-61
*12: HA-49
*13: HA-48
*14: HA-104

SYSTEM DESCRIPTION

=NFHA0183

Component Parts

NFHA0183S01

Mode door control system components are:

1) Auto amp.
2) Mode door motor (LCU)
3) In-vehicle sensor
4) Ambient sensor
5) Sunload sensor
6) Intake sensor

System Operation

NFHA0183S02

The auto amplifier receives data from each of the sensors. The amplifier sends mode door, air mix door and intake door opening angle data to the mode door motor LCU, air mix door motor LCU and intake door motor LCU.

The mode door motor, air mix door motor and intake door motor read their respective signals according to the address signal. Opening angle indication signals received from the auto amplifier and each of the motor position sensors are compared by the LCUs in each motor with the existing decision and opening angles. Subsequently, HOT/COLD or OPEN/CLOSE or DEFROST/VENT operation is selected. The new selection data is returned to the auto amplifier.

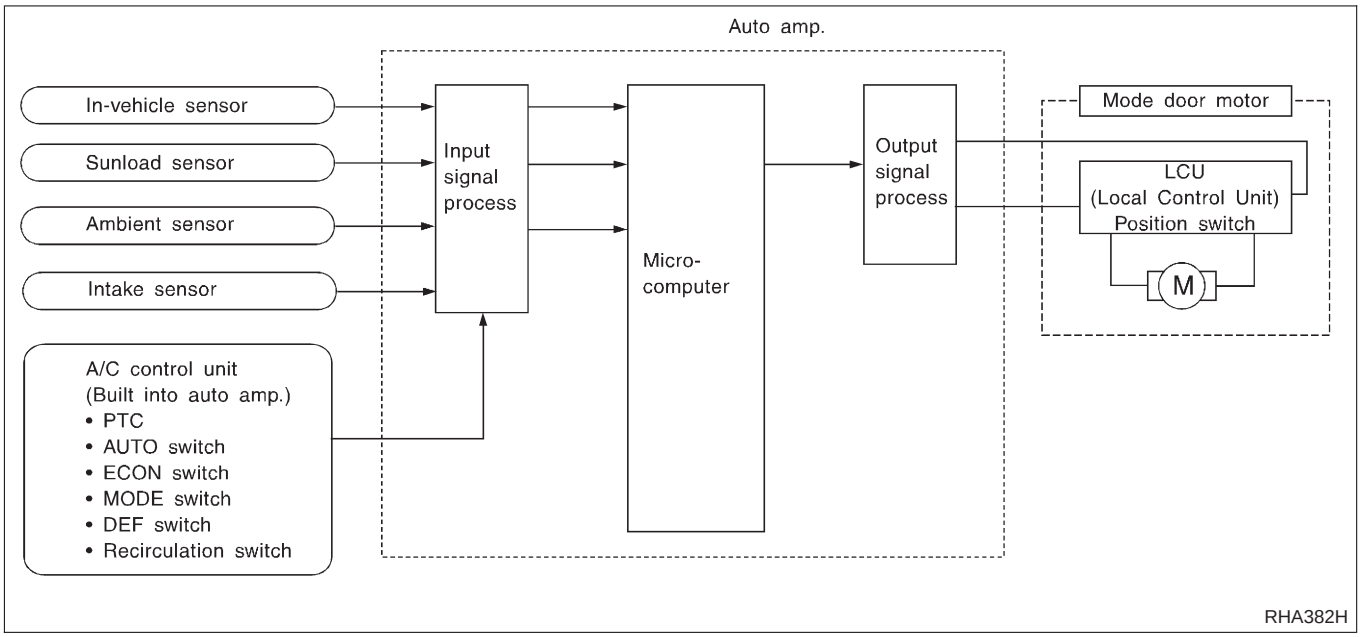

Mode Door Control Specification

NFHA0183S03

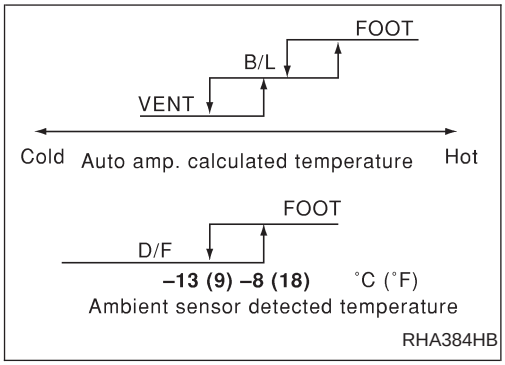

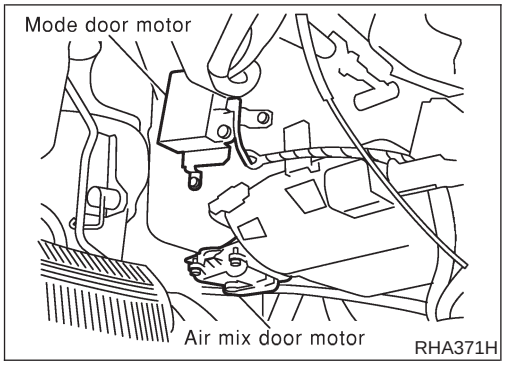

COMPONENT DESCRIPTION

NFHA0184

The mode door motor is attached to the heater unit. It rotates so that air is discharged from the outlet set by the auto amplifier. Motor rotation is conveyed to a link which activates the mode door.

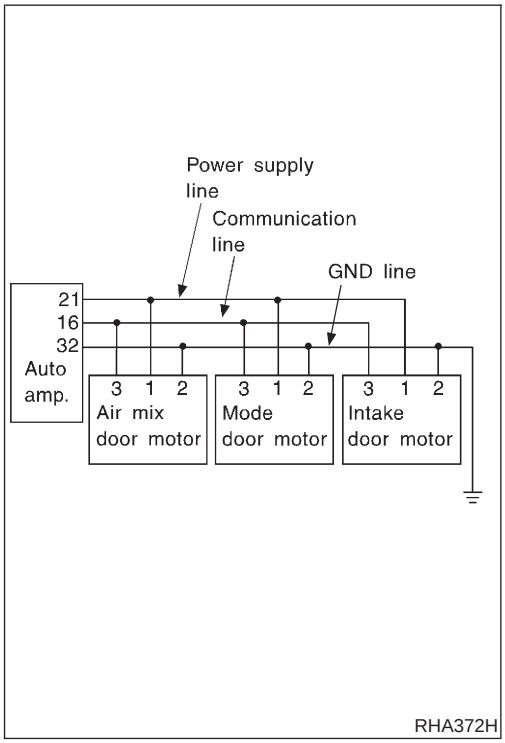

DIAGNOSTIC PROCEDURE FOR MODE DOOR MOTOR, AIR MIX DOOR MOTOR AND INTAKE DOOR MOTOR CIRCUIT

NFHA0185

SYMPTOM: Mode door motor, air mix door motor and/or intake door motor does not operate normally.

1	CHECK POWER SUPPLY FOR AUTO AMP. (LCU) SIDE

Do approx. 12 volts exist between auto amp. (LCU) harness terminal No. 21 and body ground?

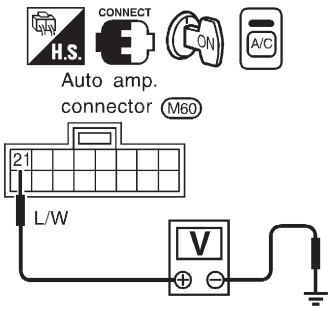

RHA373H

NOTE:
If the result is NG or No after checking circuit continuity, repair harness or connector.

Yes or No

Yes	▶	GO TO 2.
No	▶	Replace auto amp. (LCU).

2	CHECK SIGNAL FOR AUTO AMP. (LCU) SIDE

Do approx. 5.5 volts exist between auto amp. (LCU) terminal No. 16 and body ground?

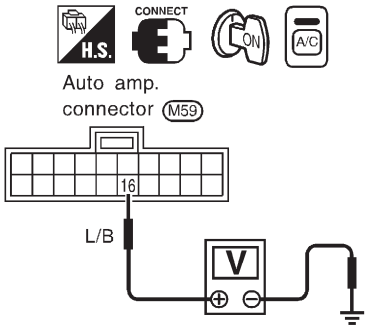

RHA374H

NOTE:
If the result is NG or No after checking circuit continuity, repair harness or connector.

Yes or No

Yes	▶	GO TO 3.
No	▶	Replace auto amp. (LCU).

3	CHECK POWER SUPPLY FOR MOTOR SIDE

Do approx. 12 volts exist between door motor (LCU) harness terminal No. 1 and body ground?

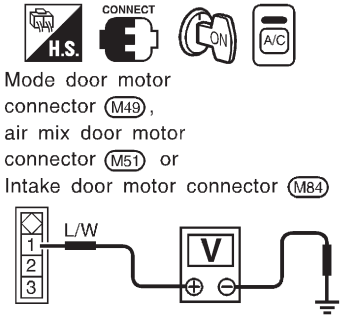

RHA375HA

Yes or No

Yes	▶	GO TO 4.
No	▶	Repair harness or connector.

4	CHECK SIGNAL FOR MOTOR SIDE

Do approx. 5.5 volts exist between door motor (LCU) terminal No. 3 and body ground?

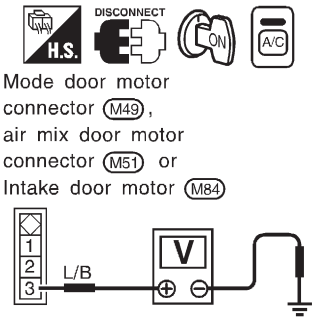

RHA376HD

Yes or No

Yes	▶	GO TO 5.
No	▶	Repair harness or connector.

5	CHECK MOTOR GROUND CIRCUIT

Does continuity exist between door motor (LCU) harness terminal No. 2 and body ground?

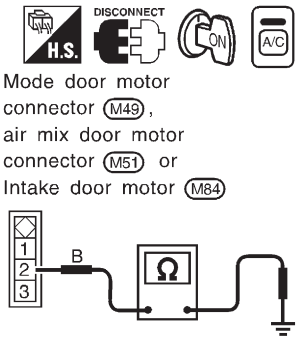

RHA377HA

Yes or No

Yes	▶	GO TO 6.
No	▶	Repair harness or connector.

6	CHECK MOTOR OPERATION

Disconnect and reconnect the motor connector and confirm the motor operation.

OK or NG

OK (Return to operate normally.)	▶	Poor contacting the motor connector
NG (Does not operate normally.)	▶	GO TO 7.

7	CHECK MODE DOOR MOTOR AND INTAKE DOOR MOTOR OPERATION

1. Disconnect the mode door motor and air mix door motor connector.
2. Reconnect the mode door motor and confirm the mode door and intake door motor operation.

OK or NG

OK (Mode door motor and intake door motor operate normally.)	▶	Replace the air mix door motor.
NG (Mode door motor and intake door motor do not operate normally.)	▶	GO TO 8.

8	CHECK MODE DOOR MOTOR AND AIR MIX DOOR MOTOR OPERATION

1. Disconnect the intake door motor connector.
2. Reconnect the air mix door motor and confirm the mode door and air mix door motor operation.

OK or NG

OK (Mode door motor and air mix door motor operate normally.)	▶	Replace intake door motor.
NG (Mode door motor and air mix door motor do not operate normally.)	▶	GO TO 9.

9	CHECK AIR MIX DOOR MOTOR AND INTAKE DOOR MOTOR OPERATION
1. Disconnect the mode door motor connector. 2. Reconnect the intake door motor and confirm the air mix door and intake door motor operation. **OK or NG**	
OK (Air mix door motor and intake door motor operate normally.) ▶	Replace mode door motor.
NG (Air mix door motor and intake door motor do not operate normally.) ▶	Replace auto amp.

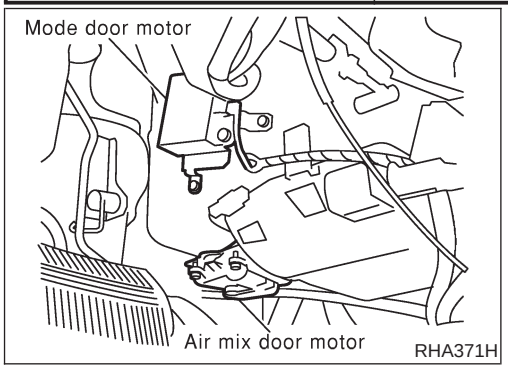

CONTROL LINKAGE ADJUSTMENT

NFHA0186

Mode Door

NFHA0186S01

1. Install mode door motor on heater unit and connect it to main harness.
2. Set up code No. in Self-diagnosis STEP 4. Refer to HA-39.
3. Move side link by hand and hold mode door in DEF mode.
4. Attach mode door motor rod to side link rod holder.
5. Make sure mode door operates properly when changing from code No. 41 to 46 by pushing DEF switch.

41	42	43	44	45	46
VENT	B/L	B/L	FOOT	D/F	DEF

Air Mix Door Motor

TROUBLE DIAGNOSIS PROCEDURE FOR AIR MIX DOOR (LAN)

=NFHA0187

SYMPTOM:

- **Discharge air temperature does not change.**
- **Air mix door motor does not operate.**

INSPECTION FLOW

1. Confirm symptom by performing the following operational check.

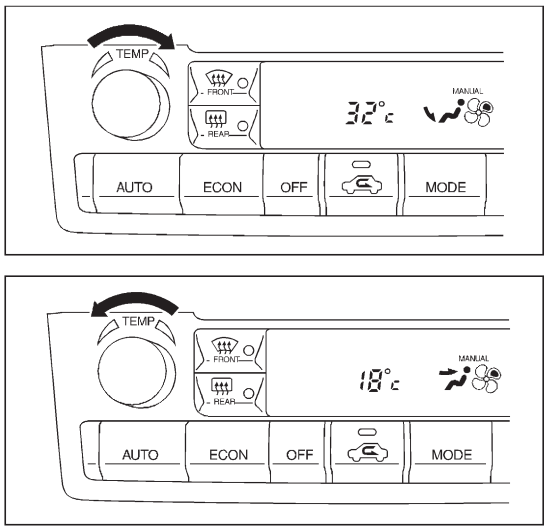

OPERATIONAL CHECK

Temperature increase

a. Turn the temperature dial clockwise until 32°C (85°F) is displayed.
b. Check for hot air at discharge air outlets.

Temperature decrease

a. Turn the temperature dial counterclockwise until 18°C (65°F) is displayed.
b. Check for cold air at discharge air outlets.

If OK (symptom cannot be duplicated), perform complete operational check (*10).
If NG (symptom is confirmed), continue with STEP-2 following.

2. Check for any service bulletins. → 3. Perform self-diagnosis STEP-1. (*1)

OK

4. Perform self-diagnosis STEP-2. (*15) — NG → Go to appropriate malfunctioning sensor circuit. (*6)

OK

5. Perform self-diagnosis STEP-4. (*15)

OK **[Cause cannot be confirmed by self-diagnosis.]**

6. Check ambient sensor circuit. (*2)

OK

7. Check in-vehicle sensor circuit. (*3)

OK

8. Check sunload sensor circuit. (*4)

OK

9. Check intake sensor circuit. (*14)

OK

10. Check air mix door motor PBR circuit. (*5)

OK

If the symptom still exists, perform a complete operational check (*12) and check for other symptoms. [Refer to symptom table, (*13).] Does another symptom exist? — Yes → Go to Trouble Diagnosis for related symptom.

Another symptom exists.

No → Replace auto amp. → INSPECTION END

NG → Check air mix door control linkage. (*8)

OK → Go to DIAGNOSTIC PROCEDURE FOR MODE DOOR MOTOR, AIR MIX DOOR MOTOR and INTAKE DOOR MOTOR CIRCUIT. (*7)

NG → Repair or adjust control linkage. (*9)

SHA409F

*1: HA-38
*2: HA-94
*3: HA-97
*4: HA-101
*5: HA-107
*6: FUNCTION CONFIRMATION PROCEDURE (HA-39), see No. 13.
*7: HA-58
*8: HA-64
*9: HA-64
*10: HA-49
*12: HA-49
*13: HA-48
*14: HA-104
*15: HA-39

SYSTEM DESCRIPTION

=NFHA0188

Component Parts

NFHA0188S01

Air mix door control system components are:

1) Auto amp.
2) Air mix door motor (LCU)
3) In-vehicle sensor
4) Ambient sensor
5) Sunload sensor
6) Intake sensor

System Operation

NFHA0188S02

The auto amplifier receives data from each of the sensors. The amplifier sends mode door, air mix door, intake door opening angle data to the mode door motor LCU, air mix door motor LCU and intake door motor LCU. The mode door motor, air mix door motor and intake door motor read their respective signals according to the address signal. Opening angle indication signals received from the auto amplifier and each of the motor position sensors are compared by the LCUs in each motor with the existing decision and opening angles. Subsequently, HOT/COLD or DEFROST/VENT operation is selected. The new selection data is returned to the auto amplifier.

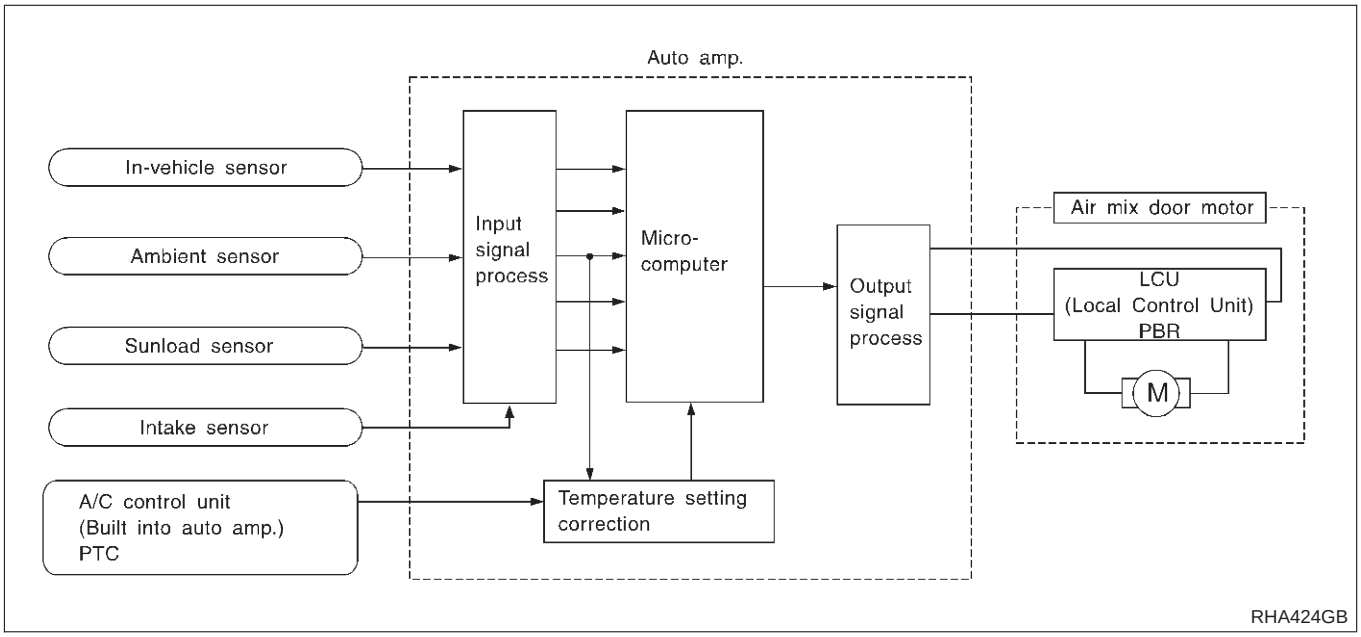

Air Mix Door Control Specification

NFHA0188S03

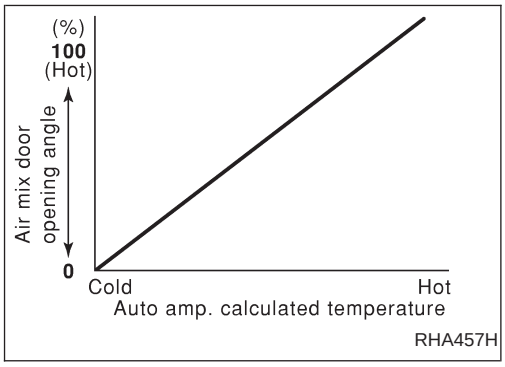

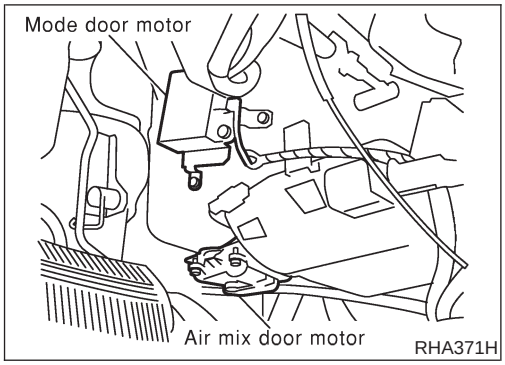

COMPONENT DESCRIPTION

NFHA0189

The air mix door motor is attached to the heater unit. It rotates so that the air mix door is opened or closed to a position set by the auto amplifier. Motor rotation is then conveyed through a shaft and the air mix door position is then fed back to the auto amplifier by PBR built-in air mix door motor.

DIAGNOSTIC PROCEDURE

NFHA0248

SYMPTOM: Discharge air temperature does not change.

- **Refer to HA-58.**

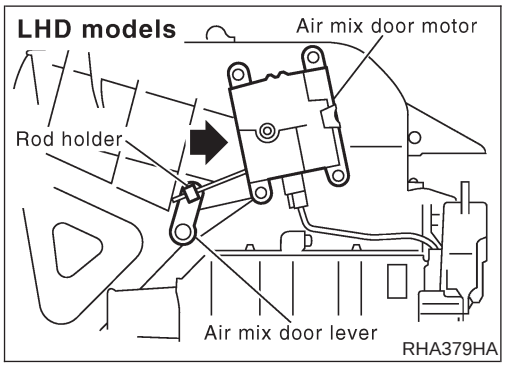

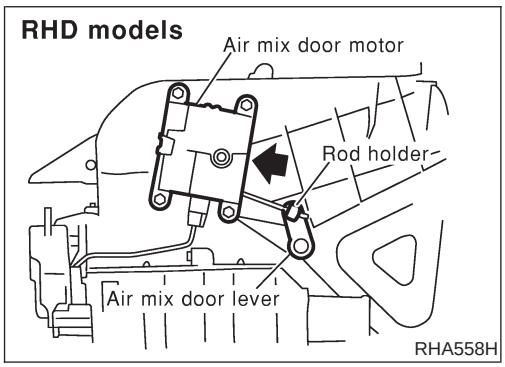

CONTROL LINKAGE ADJUSTMENT

NFHA0190

Air Mix Door

NFHA0190S01

1. Install air mix door motor on heater unit and connect it to main harness.
2. Set up code No. 41 in Self-diagnosis STEP 4. Refer to HA-38.
3. Move air mix door lever by hand and hold it in full cold position.
4. Attach air mix door lever to rod holder.
5. Make sure air mix door operates properly when changing from code No. 41 to 46 by pushing DEF switch.

41	42	43	44	45	46
Full cold		Full hot			

Intake Door Motor

TROUBLE DIAGNOSIS PROCEDURE FOR INTAKE DOOR (LAN)

=NFHA0191

SYMPTOM:

- **Intake door does not change.**
- **Intake door motor does not operate normally.**

INSPECTION FLOW

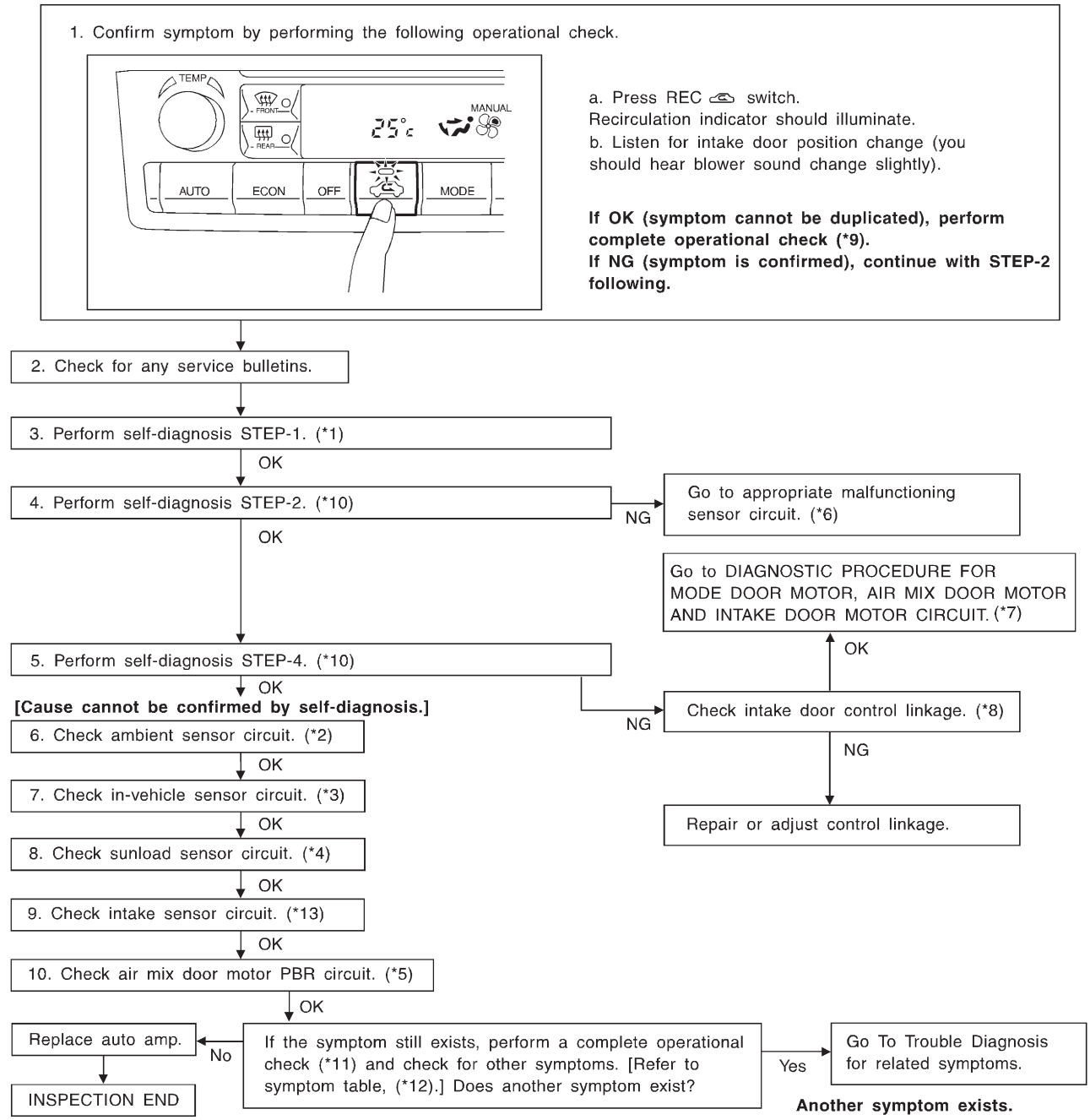

SHA410F

*1: HA-38
*2: HA-94
*3: HA-97
*4: HA-101
*5: HA-107
*6: FUNCTION CONFIRMATION PROCEDURE (HA-39), see No. 13.
*7: HA-67
*8: HA-67
*9: HA-49
*10: HA-39
*11: HA-49
*12: HA-48
*13: HA-104

SYSTEM DESCRIPTION

=NFHA0192

Component Parts

NFHA0192S01

Intake door control system components are:

1) Auto amp.
2) Intake door motor (LCU)
3) In-vehicle sensor
4) Ambient sensor
5) Sunload sensor
6) Intake sensor

System Operation

NFHA0192S02

The auto amplifier receives data from each of the sensors. The amplifier sends mode door, air mix door, intake door opening angle data to the mode door motor LCU, air mix door motor LCU and intake door motor LCU.

The mode door motor, air mix door motor and intake door motor read their respective signals according to the address signal. Opening angle indication signals received from the auto amplifier and each of the motor position sensors are compared by the LCUs in each motor with the existing decision and opening angles. Subsequently, HOT/COLD or DEFROST/VENT operation is selected. The new selection data is returned to the auto amplifier. When the ECON, DEFROST, or OFF switches are pushed, the auto amplifier sets the intake door at the "Fresh" position.

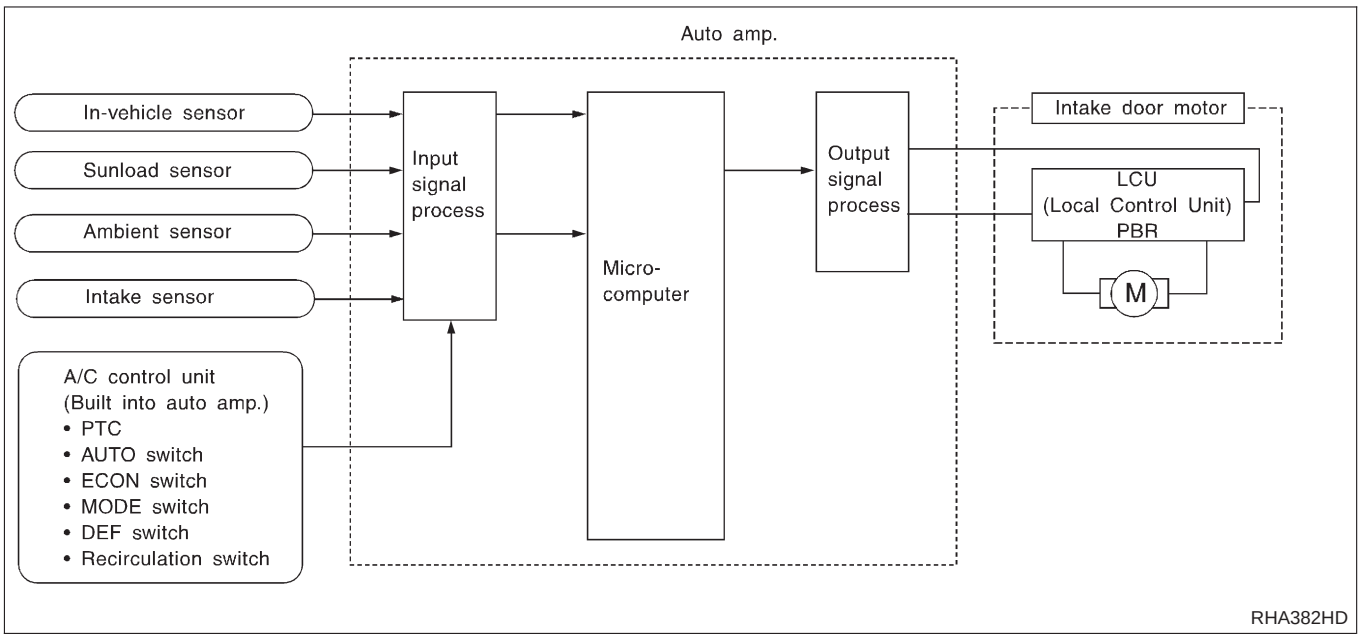

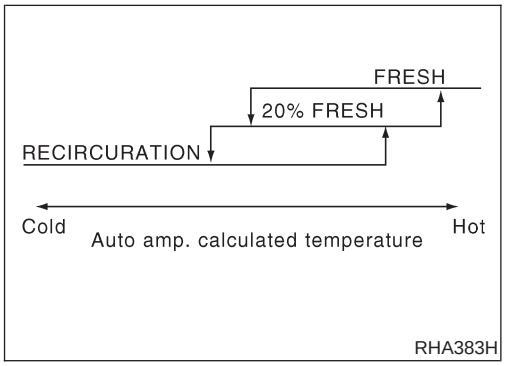

Intake Door Control Specification

NFHA0192S03

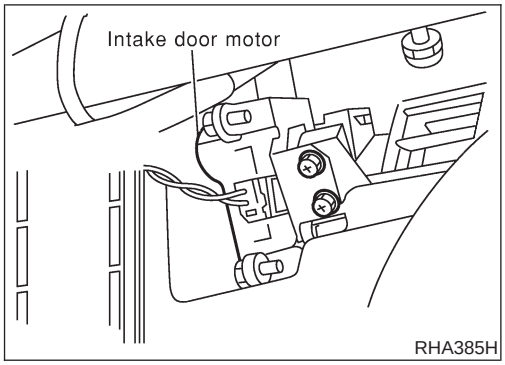

COMPONENT DESCRIPTION

NFHA0193

The intake door motor is attached to the intake unit. It rotates so that air is drawn from inlets set by the auto amplifier. Motor rotation is conveyed to a lever which activates the intake door.

DIAGNOSTIC PROCEDURE

NFHA0194

SYMPTOM: Intake door motor does not operate normally.

- **Refer to HA-58.**

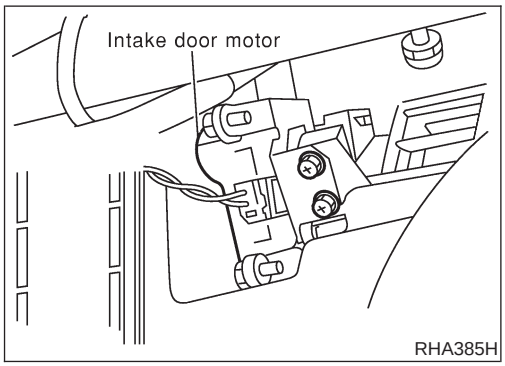

CONTROL LINKAGE ADJUSTMENT

NFHA0195

Intake Door

NFHA0195S01

1. Install intake door motor on intake unit and connect it to main harness.
2. Set up code No. 41 in Self-diagnosis STEP 4. Refer to HA-39.
3. Make sure intake door operates properly when changing from code No. 41 to 46 by pushing DEF switch.

41	42	43	44	45	46
REC		20% FRE	FRE		

Blower Motor

TROUBLE DIAGNOSIS PROCEDURE FOR BLOWER MOTOR

=NFHA0196

SYMPTOM:

- **Blower motor operation is malfunctioning.**
- **Blower motor operation is malfunctioning under out of starting fan speed control.**

INSPECTION FLOW

1. Confirm symptom by performing the following operational check.

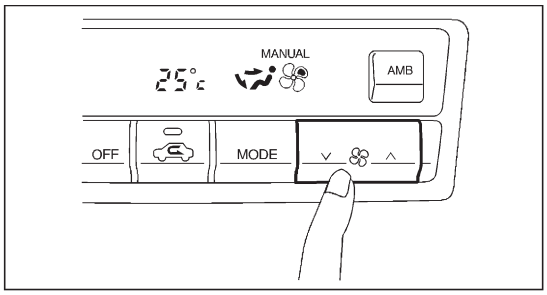

OPERATIONAL CHECK – Blower

a. Press fan switch (up side) one time.
Blower should operate on low speed.
The fan symbol should have one blade lit.
b. Press fan switch (up side) one more time, and continue checking blower speed and fan symbol until all speeds are checked.
c. Leave blower on MAX speed.

If OK (symptom cannot be duplicated), perform complete operational check (*12).
If NG (symptom is confirmed), continue with STEP-2 following.

2. Check for any service bulletins. → 3. Perform self-diagnosis STEP-1. (*1)

OK ↓

4. Perform self-diagnosis STEP-2. (*9)
Code No. 20 should be displayed after approx. 4 second.
NG → Go to appropriate malfunctioning sensor circuit. (*6)

OK ↓

5. Perform self-diagnosis STEP-4. (*9)
Does blower motor speed change according to each code No.?
No → Go to Blower Motor Circuit. (*7)

Code No.	41	42	43	44	45	46
Blower motor speed	Low	Middle high	Middle low			High

Yes ↓

6. Is engine coolant temperature below 50°C (122°F) and ambient temperature below 15°C (59°F)?
No → Blower motor operation is normal.

Yes ↓

7. Is blower motor operating under starting blower speed control?
No → Go to Blower Motor Circuit. (*8) → OK → Check thermal transmitter control circuit. Refer to EL-(*14), "Electrical Component Inspection".

Yes **[Cause cannot be confirmed by self-diagnosis.]** ↓

8. Check ambient sensor circuit. (*2)

OK ↓

9. Check in-vehicle sensor circuit. (*3)

OK ↓

10. Check sunload sensor circuit. (*4)

OK ↓

11. Check intake sensor circuit. (*13)

OK ↓

12. Check air mix door motor PBR circuit. (*5)

OK ↓

If the symptom still exists, perform a complete operational check (*10) and check for other symptoms. [Refer to symptom table, (*11).] Does another symptom exist?
Yes → Go to Trouble Diagnosis for related symptom.
Another symptom exists.

No ↓

Replace auto amp. → INSPECTION END

SHA411F

*1: HA-38
*2: HA-94
*3: HA-97
*4: HA-101
*5: HA-107
*6: FUNCTION CONFIRMATION PROCEDURE (HA-39), see No. 13.
*7: HA-71
*8: HA-71
*9: HA-39
*10: HA-49
*11: HA-48
*12: HA-49
*13: HA-104
*14: ***EL-138***

SYSTEM DESCRIPTION

=NFHA0197

Component parts

NFHA0197S01

Fan speed control system components are:

1) Auto amp.
2) Fan control amp.
3) A/C LAN system (PBR built-in air mix door motor, mode door motor and intake door motor)
4) In-vehicle sensor
5) Ambient sensor
6) Sunload sensor
7) Intake sensor

System Operation

NFHA0197S02

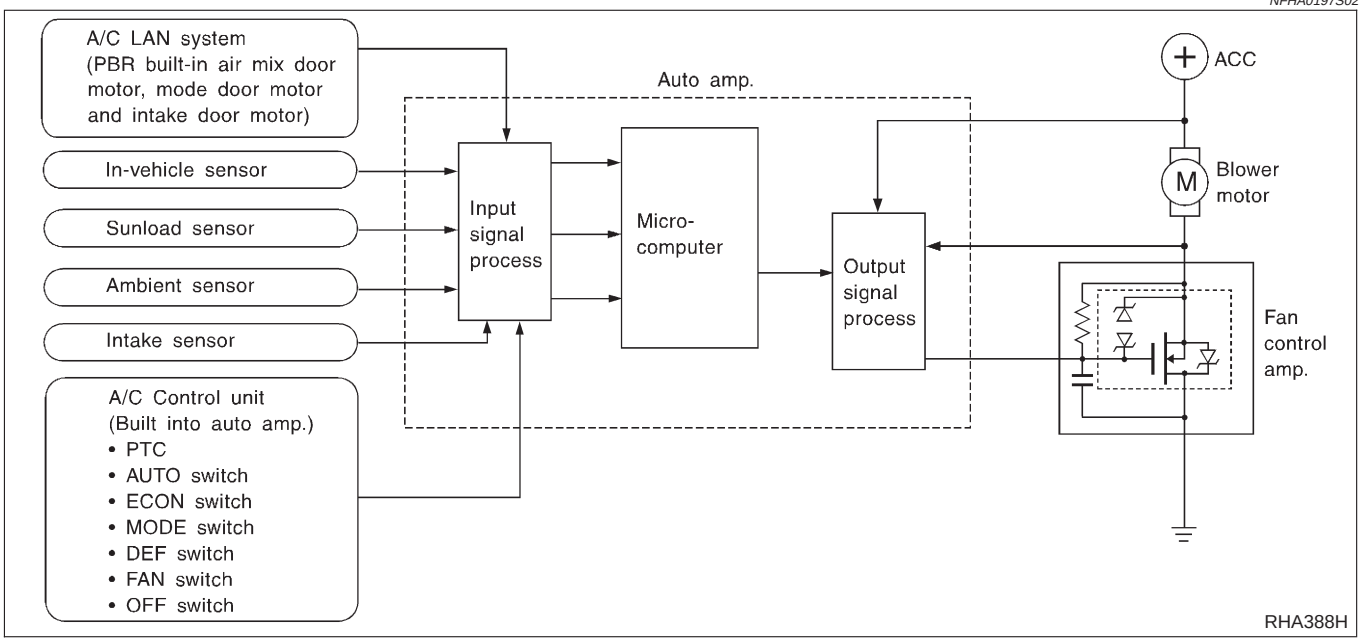

Automatic Mode

NFHA0197S03

In the automatic mode, the blower motor speed is calculated by the automatic amplifier based on inputs from the PBR, in-vehicle sensor, sunload sensor, intake sensor and ambient sensor. The blower motor applied voltage ranges from approximately 5 volts (lowest speed) to 12 volts (highest speed).

The control blower speed (in the range of 5 to 12V), the automatic amplifier supplies a gate voltage to the fan control amplifier. Based on this voltage, the fan control amplifier controls the voltage supplied to the blower motor.

Starting Fan Speed Control

NFHA0197S04

Start Up From "COLD SOAK" Condition (Automatic mode)

NFHA0197S0401

In a cold start up condition where the engine coolant temperature is below 50°C (122°F), the blower will not operate for a short period of time (up to 126 seconds). The exact start delay time varies depending on the ambient and engine coolant temperature.

In the most extreme case (very low ambient) the blower starting delay will be 126 seconds as described above. After this delay, the blower will operate at low speed until the engine coolant temperature rises above 55°C (131°F), at which time the blower speed will increase to the objective speed.

Start Up From Normal or "HOT SOAK" Condition (Automatic mode)

NFHA0197S0402

The blower will begin operation momentarily after the AUTO button is pushed. The blower speed will gradually rise to the objective speed over a time period of 3 seconds or less (actual time depends on the objective blower speed).

Blower Speed Compensation

NFHA0197S05

Sunload

NFHA0197S0501

When the in-vehicle temperature and the set temperature are very close, the blower will be operating at low speed. The low speed will vary depending on the sunload. During conditions of high sunload, the blower low speed is "normal" low speed (approx. 6V). During low or no sunload conditions, the low speed will drop to "low" low speed (approx. 5V).

Ambient

NFHA0197S0502

When the ambient temperature is in the "moderate" range [10 - 15°C (50 - 59°F)], the computed blower voltage will be compensated (reduced) by up to 3.5V (depending on the blower speed). In the "extreme" ambient ranges [below 0°C (32°F) and above 20°C (68°F)] the computed objective blower voltage is not compensated at all. In the ambient temperature ranges between "moderate" and "extreme" [0 - 10°C (32 - 50°F) and 15 - 20°C (59 - 68°F)], the amount of compensation (for a given blower speed) varies depending on the ambient temperature.

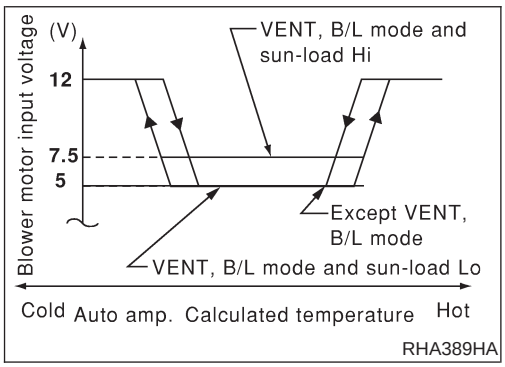

Fan Speed Control Specification

NFHA0197S06

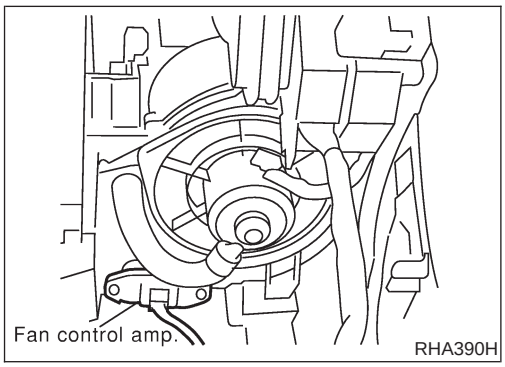

COMPONENT DESCRIPTION

NFHA0198

Fan Control Amplifier

NFHA0198S01

The fan control amplifier is located on the cooling unit. The fan control amp. receives a gate voltage from the auto amp. to steplessly maintain the blower fan motor voltage in the 5 to 12 volt range (approx.).

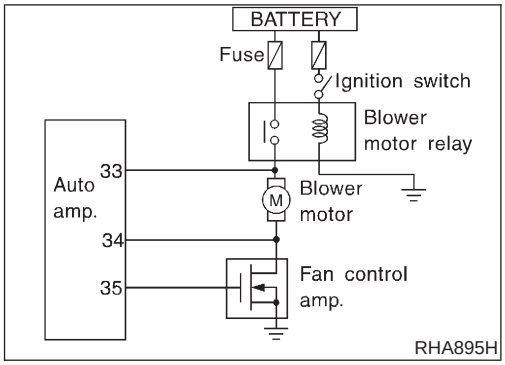

DIAGNOSTIC PROCEDURE

NFHA0199

SYMPTOM: Blower motor operation is malfunctioning under Starting Fan Speed Control.

1	CHECK POWER SUPPLY FOR FAN CONTROL AMP.

Disconnect fan control amp. harness connector.
Do approx. 12 volts exist between fan control amp. harness terminal No. 1 and body ground?

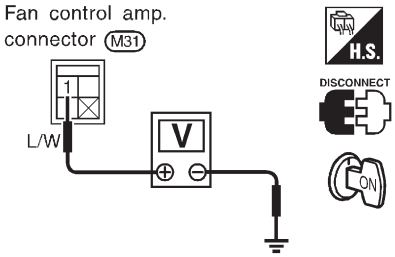

RHA392H

Yes or No

Yes	▶	GO TO 2.
No	▶	GO TO 8.

2	CHECK BODY GROUND CIRCUIT FOR FAN CONTROL AMP.

Does continuity exist between fan control amp. harness terminal No. 3 and body ground?

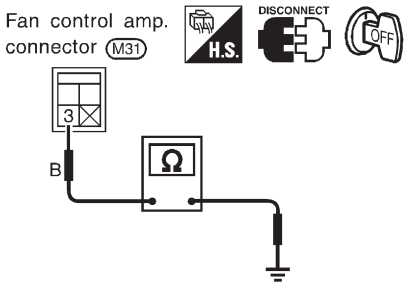

RHA393H

Yes or No

Yes	▶	Reconnect fan control amp. harness connector. And GO TO 3.
No	▶	Repair harness or connector.

3	CHECK FOR AUTO AMP. OUTPUT

Set up Self-diagnosis STEP 4.
Measure voltage across fan control amp. harness terminal No. 2 and body ground.

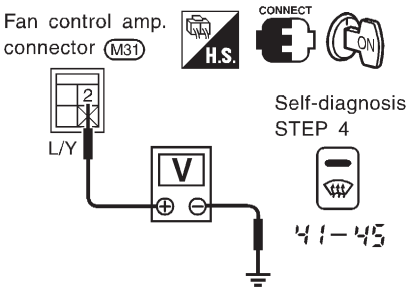

Code No.	Terminal No.		Voltage
	(+)	(–)	
41-45	(2)	Body ground	Approx. 2.5 - 3V

SHA321FA

OK or NG

OK	▶	GO TO 4.
NG	▶	● The result is less than 2.5V. Replace fan control amp. ● The result is more than 3.0V. GO TO 4.

4	CHECK FAN CONTROL AMP.

Refer to HA-75.

OK or NG

OK	▶	GO TO 5.
NG	▶	Replace fan control amp.

5	CHECK FAN CONTROL AMP. CIRCUIT BETWEEN FAN CONTROL AMP. AND AUTO AMP. (LCU)

1. Disconnect auto amp. (LCU) and fan control amp. harness connector.
2. Check circuit continuity between auto amp. (LCU) harness terminal No. 35 and fan control amp. harness terminal No. 2.

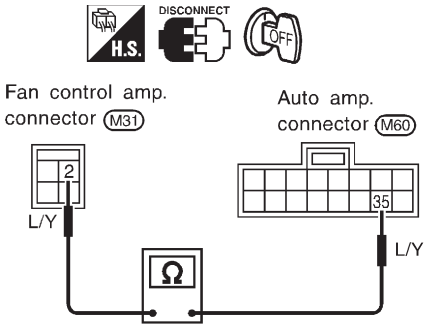

RHA559H

Continuity should exist.
If OK, check harness for short.

OK or NG

OK	▶	GO TO 6.
NG	▶	Repair harness or connector.

6	CHECK FAN FEED BACK CIRCUIT

Reconnect auto amp. (LCU) harness connector.
Do approx. 12 volts exist between auto amp. (LCU) harness terminal No. 33 and body ground?

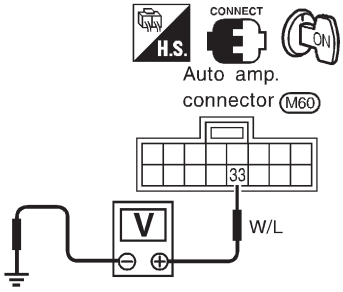

RHA560H

Yes or No

Yes	▶	GO TO 7.
No	▶	Check power supply circuit and 15A fuses (Nos. 51 and 52, located in the fuse block). Refer to ***EL-10***, "Wiring Diagram — POWER —". ● If OK, check for open circuit in wiring harness. Repair or replace as necessary. ● If NG, replace fuse and check wiring harness for short circuit. Repair or replace as necessary.

7	CHECK POWER SUPPLY FOR AUTO AMP.

Do approx. 12 volts exist between auto amp. harness terminal No. 34 and body ground?

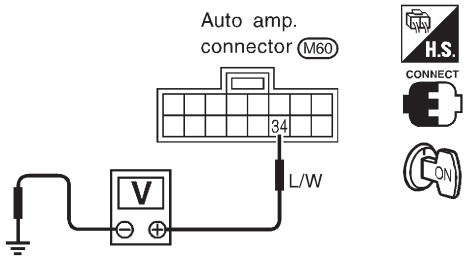

RHA561H

Yes or No

Yes	▶	1. Replace auto amp. 2. Go to "FUNCTION CONFIRMATION PROCEDURE", "Self-diagnosis", HA-39 and perform self-diagnosis STEP-4. Confirm that blower motor operation is normal.
No	▶	GO TO 10.

8	CHECK POWER SUPPLY FOR BLOWER MOTOR

Disconnect blower motor harness connector.
Do approx. 12 volts exist between blower motor harness terminal No. 1 and body ground?

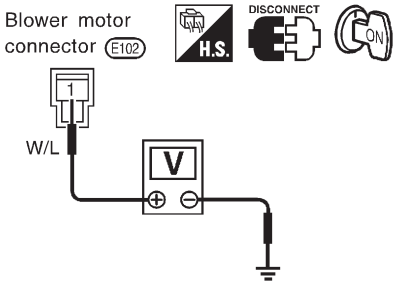

RHA091GE

Yes or No

Yes	▶	GO TO 9.
No	▶	**Check power supply circuit and 15A fuses (Nos. 51 and 52, located in the fuse block).** ● Check blower motor relay. ● If OK, check for open circuit in wiring harness. Repair or replace as necessary. ● If NG, replace fuse and check wiring harness for short circuit. Repair or replace as necessary.

9	CHECK CIRCUIT CONTINUITY BETWEEN BLOWER MOTOR AND FAN CONTROL AMP.

Disconnect blower motor connector and auto amp. (LCU) connector.
Check circuit continuity between blower motor harness terminal No. 2 and fan control amp. harness terminal No. 1.

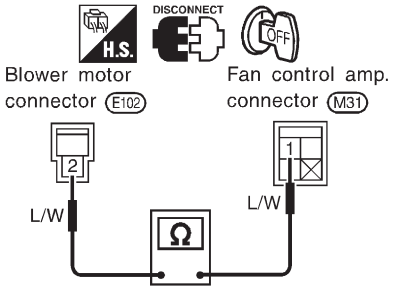

RHA397H

Continuity should exist.
If OK, check harness for short.

OK or NG

OK	▶	**Check blower motor. (Refer to HA-75.)** 1. If NG, replace blower motor. 2. Go to "FUNCTION CONFIRMATION PROCEDURE", "Self-diagnosis", HA-39 and perform self-diagnosis STEP-4. Confirm that blower motor operation is normal.
NG	▶	Repair harness or connector.

10	CHECK BLOWER MOTOR CIRCUIT BETWEEN BLOWER MOTOR AND AUTO AMP. (LCU)

Check circuit continuity between blower motor harness terminal No. 2 and auto amp. (LCU) harness terminal No. 34.

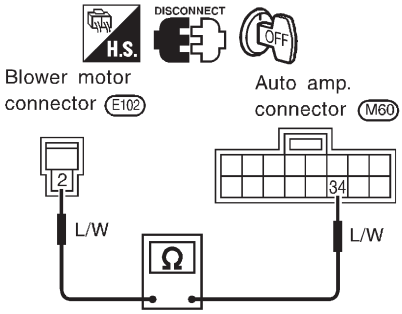

RHA562H

Continuity should exist.
If OK, check harness for short.

OK or NG

NG	▶	Repair harness or connector.

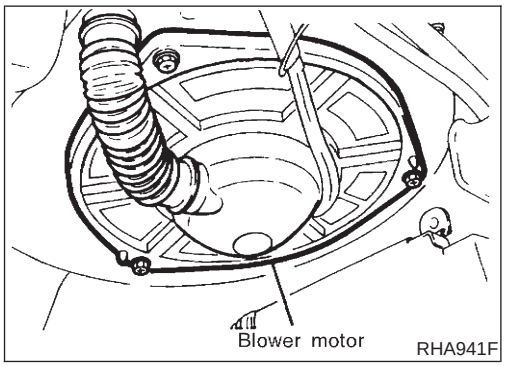

RHA941F

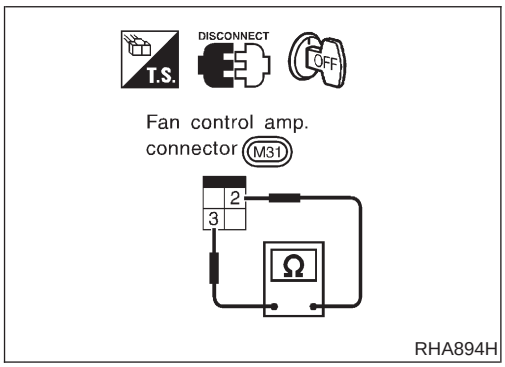

RHA894H

COMPONENT INSPECTION

NFHA0200

Blower Motor

NFHA0200S01

Confirm smooth rotation of the blower motor.

- Ensure that there are no foreign particles inside the intake unit.

Fan Control Amp.

NFHA0200S02

Check circuit continuity between terminals.

Terminal Nos.	Continuity
2 - 3	Yes

Magnet Clutch

TROUBLE DIAGNOSIS PROCEDURE FOR MAGNET CLUTCH

=NFHA0201

SYMPTOM:

- **Magnet clutch does not engage.**

INSPECTION FLOW

1. Confirm symptom by performing operational check.

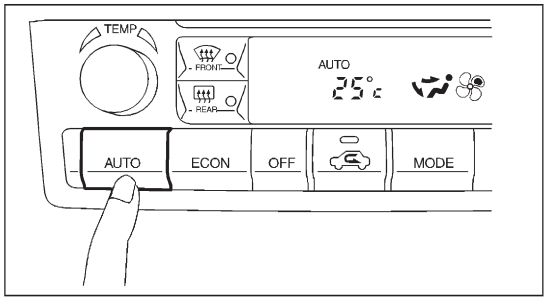

OPERATIONAL CHECK – AUTO mode

a. Press AUTO switch.
b. Display should indicate AUTO (not ECON).
Confirm that the compressor clutch engages (audio or visual inspection).
(Discharge air and blower speed will depend on ambient, in-vehicle and set temperatures.)

If OK (symptom cannot be duplicated), perform complete operational check (*9).
If NG (symptom is confirmed), continue with STEP-2 following.

2. Check for any service bulletins. → 3. Perform self-diagnosis STEP-1. (*1)

OK ↓

4. Perform self-diagnosis STEP-2. (*10) → NG → Go to appropriate malfunctioning sensor circuit. (*6)

OK ↓

5. Perform self-diagnosis STEP-4. (*10) → NG → Go to Magnet Clutch Circuit. (*7)
   - Check Magnet Clutch Mechanism.
   - Check for refrigerant pressure. (*8)

OK ↓

[Cause cannot be confirmed by self-diagnosis.]

6. Check ambient sensor circuit. (*2)

OK ↓

7. Check in-vehicle sensor circuit. (*3)

OK ↓

8. Check sunload sensor circuit. (*4)

OK ↓

9. Check intake sensor circuit. (*13)

OK ↓

10. Check air mix door motor PBR circuit. (*5)

OK ↓

If the symptom still exists, perform a complete operational check (*11) and check for other symptoms. [Refer to symptom table, (*12).] Does another symptom exist?

Yes → Go to Trouble Diagnosis for related symptom.

Another symptom exists.

No ↓

Replace auto amp. → INSPECTION END

SHA412F

*1: FUNCTION CONFIRMATION PROCEDURE (HA-39)
*2: HA-94
*3: HA-97
*4: HA-101
*5: HA-107
*6: FUNCTION CONFIRMATION PROCEDURE (HA-39), see No. 13.
*7: HA-77
*8: HA-85
*9: HA-49
*10: HA-39
*11: HA-49
*12: HA-48
*13: HA-104

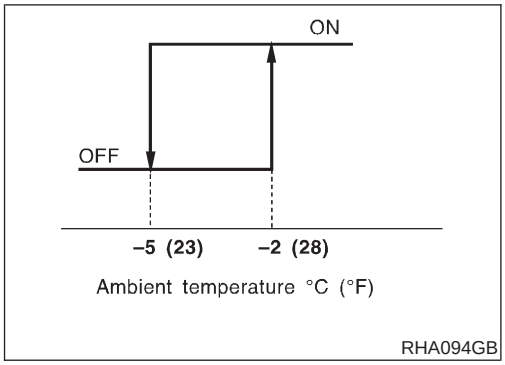

SYSTEM DESCRIPTION

=NFHA0202

Auto amplifier controls compressor operation by ambient temperature and signal from ECM.

Low Temperature Protection Control

NFHA0202S01

Auto amplifier will turn the compressor "ON" or "OFF" as determined by a signal detected by ambient sensor.
When ambient temperatures are greater than −2°C (28°F), the compressor turns "ON". The compressor turns "OFF" when ambient temperatures are less than −5°C (23°F).

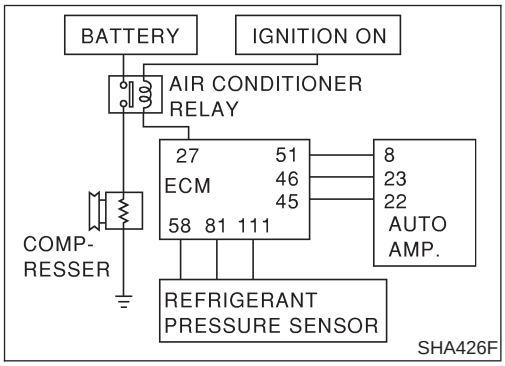

DIAGNOSTIC PROCEDURE

NFHA0203

SYMPTOM: Magnet clutch does not engage when AUTO switch is ON.

1	CHECK POWER SUPPLY FOR COMPRESSOR
Disconnect compressor harness connector. Do approx. 12 volts exist between compressor harness terminal No. 1 and body ground?	

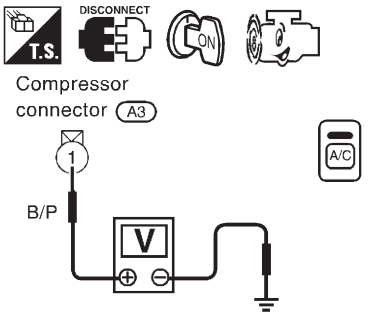

Yes or No

Yes ▶	**Check magnet clutch coil.** 1. If NG, replace magnet clutch. Refer to HA-113. 2. Go to "FUNCTION CONFIRMATION PROCEDURE", "Self-diagnosis", HA-39 and perform self-diagnosis STEP-4. Confirm that magnet clutch operation is normal.
No ▶	Disconnect A/C relay. And GO TO 2.

2	CHECK CIRCUIT CONTINUITY BETWEEN A/C RELAY AND COMPRESSOR

Check circuit continuity between A/C relay harness terminal No. 3 and compressor harness terminal No. 1.

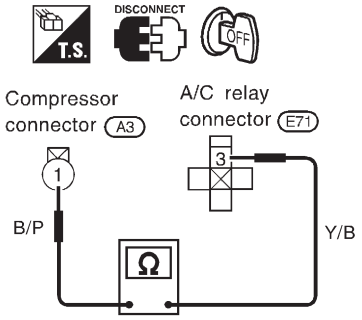

RHA400H

Continuity should exist.
If OK, check harness for short.

OK or NG

OK	▶	GO TO 3.
NG	▶	Repair harness or connector.

3	CHECK POWER SUPPLY FOR A/C RELAY

Disconnect A/C relay.
Do approx. 12 volts exist between A/C relay harness terminal Nos. 1, 5 and body ground?

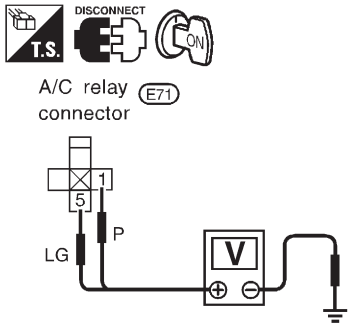

RHA401HA

Yes or No

Yes	▶	GO TO 4.
No	▶	Check power supply circuit and 10A (Nos. 19, 66) fuse at fuse block. Refer to ***EL-10***, "Wiring Diagram — POWER —". ● If OK, check for open circuit in wiring harness. Repair or replace as necessary. ● If NG, replace fuse and check wiring harness for short circuit. Repair or replace as necessary.

4	CHECK A/C RELAY AFTER DISCONNECTING IT

Refer to HA-81.

OK or NG

OK	▶	Reconnect A/C relay. And GO TO 5.
NG	▶	1. Replace A/C relay. 2. Go to "FUNCTION CONFIRMATION PROCEDURE", "Self-diagnosis", HA-39 and perform self-diagnosis STEP-4. Confirm that magnet clutch operation is normal.

5	CHECK COIL SIDE CIRCUIT OF A/C RELAY

Do approx. 12 volts exist between ECM harness terminal No. 27 and body ground?

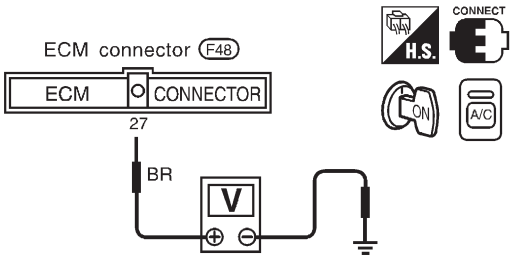

RHA482GD

Yes or No

Yes	▶	GO TO 6.
No	▶	Disconnect A/C relay. Disconnect ECM harness connector. GO TO 9.

6	CHECK VOLTAGE FOR ECM

Do approx. 12 volts exist between ECM harness terminal No. 45 and body ground?

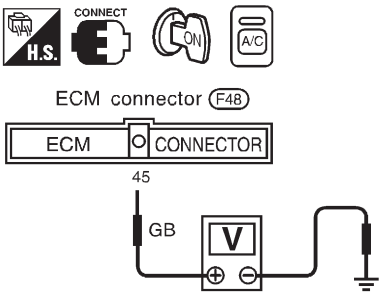

RHA701FG

Yes or No

Yes	▶	Disconnect ECM harness connector. Disconnect refrigerant pressure sensor harness connector. GO TO 7.
No	▶	Check ECM. Refer to ***EC-119***, "ECM Terminals and Reference Value".

7	CHECK REFRIGERANT PRESSURE SENSOR INPUT SIGNAL

Do approx. 0 volts exist between ECM harness terminal No. 51 and ground?

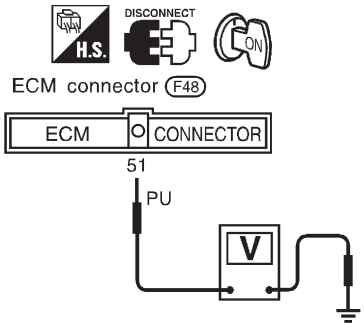

RHA402H

Yes or No

Yes	▶	GO TO 8.
No	▶	1. Repair harness or connector. 2. Go to "FUNCTION CONFIRMATION PROCEDURE", "Self-diagnosis", HA-39 and perform self-diagnosis STEP-4. Confirm that magnet clutch operation is normal.

8	CHECK REFRIGERANT PRESSURE SENSOR

Refer to HA-81.

OK or NG

OK	▶	GO TO 9.
NG	▶	Replace refrigerant pressure sensor.

9	CHECK CIRCUIT CONTINUITY BETWEEN A/C RELAY AND ECM

Check circuit continuity between A/C relay harness terminal No. 2 and ECM harness terminal No. 27.

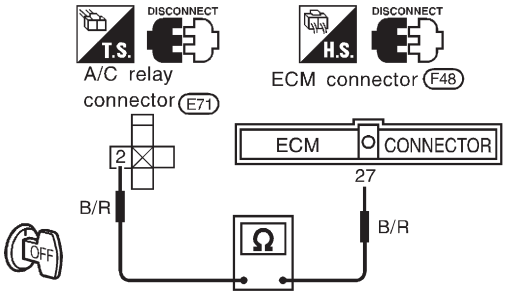

RHA403H

Continuity should exist.
If OK, check harness for short.

OK or NG

OK	▶	Check ECM. Refer to ***EC-119***, "ECM Terminals and Reference Value".
NG	▶	Repair harness or connector. Replace auto amp.

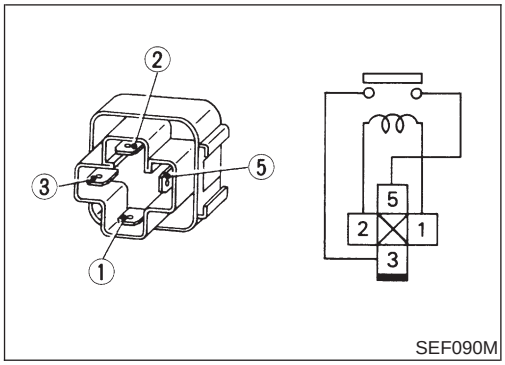

SEF090M

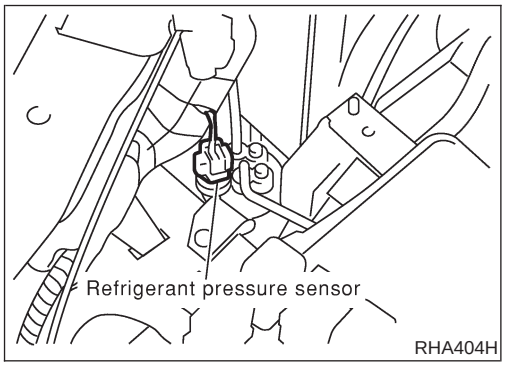

RHA404H

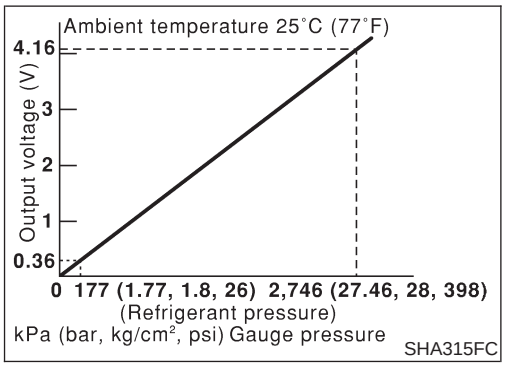

SHA315FC

COMPONENT INSPECTION

NFHA0204

A/C Relay

NFHA0204S01

Check continuity between terminal Nos. 3 and 5.

Conditions	Continuity
12V direct current supply between terminal Nos. 1 and 2	Yes
No current supply	No

If NG, replace relay.

Refrigerant Pressure Sensor

NFHA0204S02

Make sure that higher A/C refrigerant pressure results in higher refrigerant-pressure sensor output voltage.

Insufficient Cooling

TROUBLE DIAGNOSIS PROCEDURE FOR INSUFFICIENT COOLING

=NFHA0205

SYMPTOM:

- **Insufficient cooling**

INSPECTION FLOW

1. Confirm symptom by performing the following operational check.

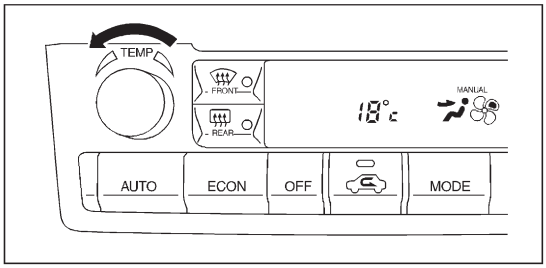

OPERATIONAL CHECK – Temperature decrease

a. Turn the temperature dial counterclockwise until 18°C (65°F) is displayed.
b. Check for cold air at discharge air outlets.

If OK (symptom cannot be duplicated), perform complete operational check (*10).
If NG (symptom is confirmed), continue with STEP-2 following.

2. Check for any service bulletins. → 3. Perform self-diagnosis STEP-1. (*1)
3. → OK → 4. Perform self-diagnosis STEP-2. (*11)
3. → NG → Go to appropriate malfunctioning sensor circuit. (*5)
4. → OK → 5. Perform self-diagnosis STEP-4. (*11)
4. → NG → **Go to appropriate malfunctioning items.**
   - Check air mix door motor circuit, mode door motor and, intake door motor. (*6)
   - Check blower motor circuit. (*7)
   - Check magnet clutch circuit. (*8)
5. → OK → 6. Check compressor belt tension. Refer to MA-(*12), "Checking Drive Belts".
6. → NG → Adjust or replace compressor belt.
6. → OK → 7. Check air mix door operation. (*2)
7. → NG → Adjust or replace air mix door control linkage.
7. → OK → 8. Check cooling fan motor operation.
8. → NG → Refer to EC-(*13), "System Description".
8. → OK → 9. Check refrigeration cycle pressure with manifold gauge connected. Refer to (*3).
9. → NG → Perform performance test diagnoses. Refer to (*9).
9. → OK → 10. Check for evaporator coil freeze up. (Does not freeze up.)
10. → NG (Freeze up.) → Replace compressor.
10. → OK → 11. Check ducts for air leaks.
11. → NG → Repair air leaks.
11. → OK → 12. Perform temperature setting trimmer. (*4)
   (1) Set up AUXILIARY MECHANISM mode in self-diagnosis.
   (2) Turn temperature dial counterclockwise as desired.
12. → OK → INSPECTION END

SHA396F

*1: HA-38
*2: HA-64
*3: HA-85
*4: HA-47
*5: FUNCTION CONFIRMATION PROCEDURE (HA-39), see No. 13.
*6: HA-57
*7: HA-69
*8: HA-77
*9: HA-83
*10: HA-49
*11: HA-39
*12: ***MA-15***
*13: ***EC-366***

PERFORMANCE TEST DIAGNOSES

NFHA0206

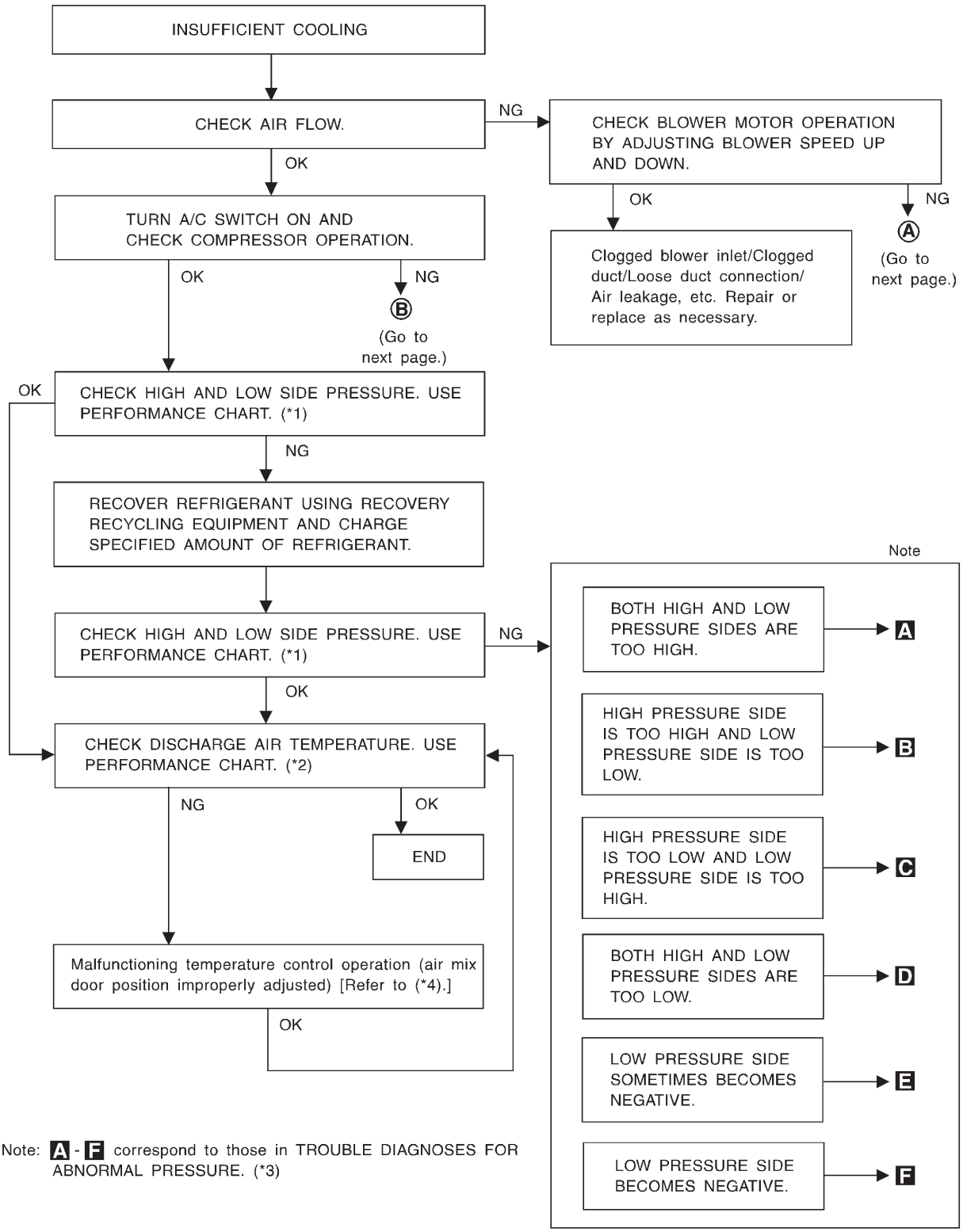

*1: HA-85
*2: HA-85
*3: HA-86
*4: HA-63

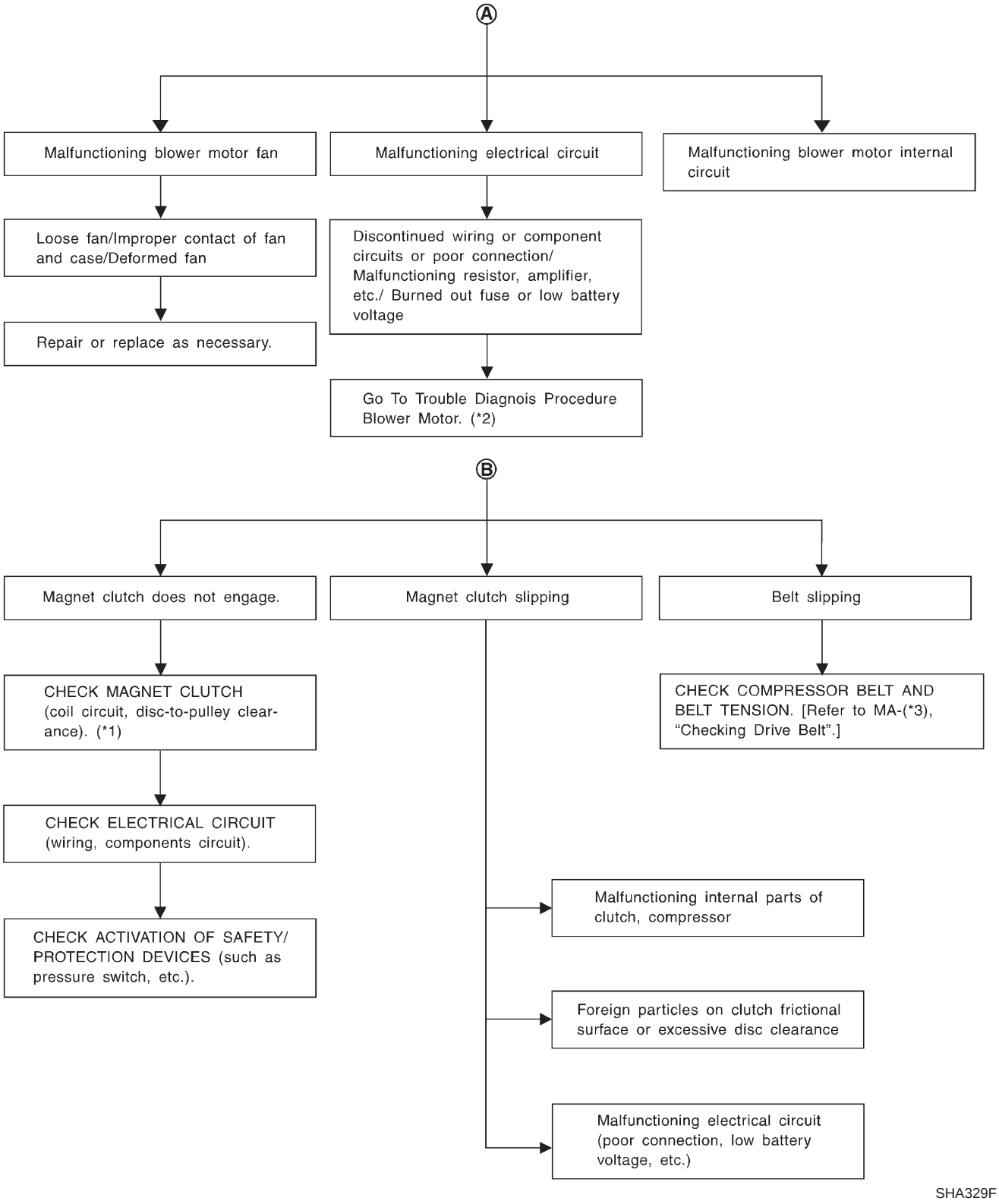

*1: HA-113 *2: HA-68 *3: ***MA-15***

PERFORMANCE TEST

NFHA0207

Test Condition

NFHA0207S01

Testing must be performed as follows:

Vehicle location	Indoors or in the shade (in a well-ventilated place)
Doors	Closed
Door windows	Open
Hood	Open
TEMP.	Max. COLD
Mode switch	(Ventilation) set
REC switch	(Recirculation) set
(blower) speed	Max. speed set
Engine speed	Idle speed
Operate the air conditioning system for 10 minutes before taking measurements.	

Test Reading

NFHA0207S02

Recirculating-to-discharge Air Temperature Table

NFHA0207S0201

Inside air (Recirculating air) at blower assembly inlet		Discharge air temperature at center ventilator °C (°F)
Relative humidity %	Air temperature °C (°F)	
50 - 60	15 (59)	3.5 - 5.4 (38 - 42)
	20 (68)	6.6 - 8.9 (44 - 48)
	25 (77)	9.5 - 12.6 (49 - 55)
	30 (86)	13.4 - 16.5 (56 - 62)
	35 (95)	17.6 - 21.3 (64 - 70)
60 - 70	15 (59)	5.4 - 7.1 (42 - 45)
	20 (68)	8.9 - 11.0 (48 - 52)
	25 (77)	12.6 - 15.4 (55 - 60)
	30 (86)	16.5 - 20.0 (62 - 68)
	35 (95)	21.3 - 24.8 (70 - 77)

Ambient Air Temperature-to-operating Pressure Table

NFHA0207S0202

Ambient air		High-pressure (Discharge side) kPa (bar, kg/cm^2, psi)	Low-pressure (Suction side) kPa (bar, kg/cm^2, psi)
Relative humidity %	Air temperature °C (°F)		
50 - 70	15 (59)	539 - 657 (5.39 - 6.57, 5.5 - 6.7, 78 - 95)	177 - 216 (1.77 - 2.16, 1.8 - 2.2, 26 - 31)
	20 (68)	677 - 824 (6.77 - 8.24, 6.9 - 8.4, 98 - 119)	167 - 206 (1.67 - 2.06, 1.7 - 2.1, 24 - 30)
	25 (77)	843 - 1,030 (8.43 - 10.30, 8.6 - 10.5, 122 - 149)	177 - 226 (1.77 - 2.26, 1.8 - 2.3, 26 - 33)
	30 (86)	1,030 - 1,275 (10.30 - 12.75, 10.5 - 13.0, 149 - 185)	216 - 255 (2.16 - 2.55, 2.2 - 2.6, 31 - 37)
	35 (95)	1,245 - 1,520 (12.45 - 15.20, 12.7 - 15.5, 181 - 220)	265 - 324 (2.65 - 3.24, 2.7 - 3.3, 38 - 47)

TROUBLE DIAGNOSES FOR ABNORMAL PRESSURE

NFHA0208

Whenever system's high and/or low side pressure is abnormal, diagnose using a manifold gauge. The marker above the gauge scale in the following tables indicates the standard (normal) pressure range. Since the standard (normal) pressure, however, differs from vehicle to vehicle, refer to HA-85 ("Ambient air temperature-to-operating pressure table").

Both High and Low-pressure Sides are Too High.

NFHA0208S01

Gauge indication	Refrigerant cycle	Probable cause	Corrective action
Both high and low-pressure sides are too high. A 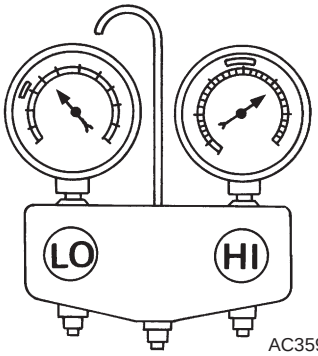 AC359A	● Pressure is reduced soon after water is splashed on condenser.	Excessive refrigerant charge in refrigeration cycle	Reduce refrigerant until specified pressure is obtained.
	Air suction by cooling fan is insufficient.	Insufficient condenser cooling performance ↓ 1. Condenser fins are clogged. 2. Improper fan rotation of cooling fan	● Clean condenser. ● Check and repair cooling fan as necessary.
	● Low-pressure pipe is not cold. ● When compressor is stopped high-pressure value quickly drops by approximately 196 kPa (1.96 bar, 2 kg/cm^2, 28 psi). It then decreases gradually thereafter.	Poor heat exchange in condenser (After compressor operation stops, high pressure decreases too slowly.) ↓ Air in refrigeration cycle	Evacuate repeatedly and recharge system.
	Engine tends to overheat.	Engine cooling systems malfunction.	Check and repair each engine cooling system.
	● An area of the low-pressure pipe is colder than areas near the evaporator outlet. ● Plates are sometimes covered with frost.	● Excessive liquid refrigerant on low-pressure side ● Excessive refrigerant discharge flow ● Expansion valve is open a little compared with the specification. ↓ 1. Improper thermal valve installation 2. Improper expansion valve adjustment	Replace expansion valve.

High-pressure Side is Too High and Low-pressure Side is Too Low.

NFHA0208S02

Gauge indication	Refrigerant cycle	Probable cause	Corrective action
High-pressure side is too high and low-pressure side is too low. B 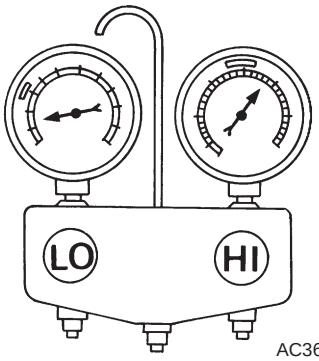 AC360A	Upper side of condenser and high-pressure side are hot, however, liquid tank is not so hot.	High-pressure tube or parts located between compressor and condenser are clogged or crushed.	● Check and repair or replace malfunctioning parts. ● Check lubricant for contamination.

High-pressure Side is Too Low and Low-pressure Side is Too High.

NFHA0208S03

Gauge indication	Refrigerant cycle	Probable cause	Corrective action
High-pressure side is too low and low-pressure side is too high. C 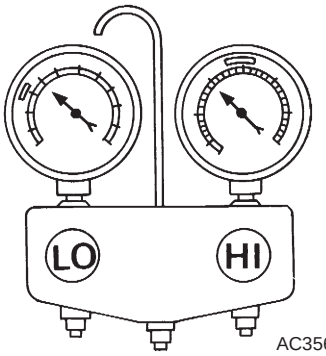 AC356A	High and low-pressure sides become equal soon after compressor operation stops.	Compressor pressure operation is improper. ↓ Damaged inside compressor packings	Replace compressor.
	No temperature difference between high and low-pressure sides	Compressor pressure operation is improper. ↓ Damaged inside compressor packings.	Replace compressor.

Both High- and Low-pressure Sides are Too Low.

NFHA0208S04

Gauge indication	Refrigerant cycle	Probable cause	Corrective action
Both high- and low-pressure sides are too low. D 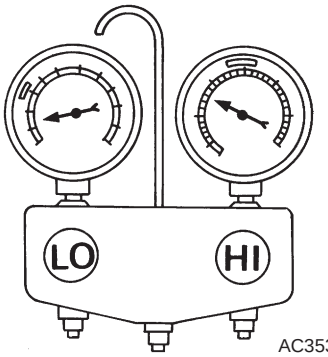 AC353A	● There is a big temperature difference between receiver drier outlet and inlet. Outlet temperature is extremely low. ● Liquid tank inlet and expansion valve are frosted.	Compressor discharge capacity does not change. (Compressor stroke is set at maximum.)	● Replace liquid tank. ● Check lubricant for contamination.
	● Temperature of expansion valve inlet is extremely low as compared with areas near liquid tank. ● Expansion valve inlet may be frosted. ● Temperature difference occurs somewhere in high-pressure side	High-pressure pipe located between receiver drier and expansion valve is clogged.	● Check and repair malfunctioning parts. ● Check lubricant for contamination.
	● Expansion valve and liquid tank are warm or only cool when touched.	Low refrigerant charge ↓ Leaking fittings or components	Check refrigerant for leaks. Refer to "Checking Refrigerant Leaks", HA-121.
	There is a big temperature difference between expansion valve inlet and outlet while the valve itself is frosted.	Expansion valve closes a little compared with the specification. ↓ 1. Improper expansion valve adjustment 2. Malfunctioning thermal valve 3. Outlet and inlet may be clogged.	● Remove foreign particles by using compressed air. ● Check lubricant for contamination.
	An area of the low-pressure pipe is colder than areas near the evaporator outlet.	Low-pressure pipe is clogged or crushed.	● Check and repair malfunctioning parts. ● Check lubricant for contamination.
	Air flow volume is not enough or is too low.	Evaporator is frozen. ↓ Compressor discharge capacity does not change. (Compressor stroke is set at maximum length.)	Replace compressor.

Low-pressure Side Sometimes Becomes Negative.

NFHA0208S05

Gauge indication	Refrigerant cycle	Probable cause	Corrective action
Low-pressure side sometimes becomes negative. E 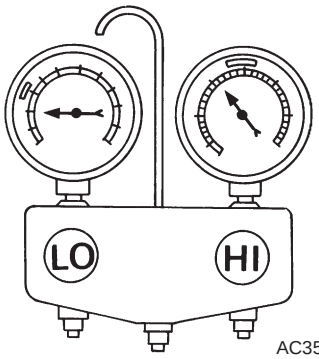 AC354A	● Air conditioning system does not function and does not cyclically cool the compartment air. ● The system constantly functions for a certain period of time after compressor is stopped and restarted.	Refrigerant does not discharge cyclically. ↓ Moisture is frozen at expansion valve outlet and inlet. ↓ Water is mixed with refrigerant.	● Drain water from refrigerant or replace refrigerant. ● Replace liquid tank.

Low-pressure Side Becomes Negative.

NFHA0208S06

Gauge indication	Refrigerant cycle	Probable cause	Corrective action
Low-pressure side becomes negative. F 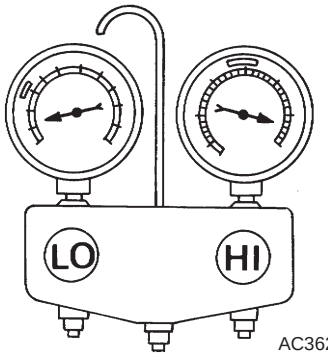 AC362A	Liquid tank or front/rear side of expansion valve's pipe is frosted or dewed.	High-pressure side is closed and refrigerant does not flow. ↓ Expansion valve or liquid tank is frosted.	Leave the system at rest until no frost is present. Start it again to check whether or not the problem is caused by water or foreign particles. ● If water is the cause, initially cooling is okay. Then the water freezes causing a blockage. Drain water from refrigerant or replace refrigerant. ● If due to foreign particles, remove expansion valve and remove the particles with dry and compressed air (not shop air). ● If either of the above methods cannot correct the problem, replace expansion valve. ● Replace liquid tank. ● Check lubricant for contamination.

Insufficient Heating

TROUBLE DIAGNOSIS PROCEDURE FOR INSUFFICIENT HEATING

=NFHA0209

SYMPTOM:

- **Insufficient heating**

INSPECTION FLOW

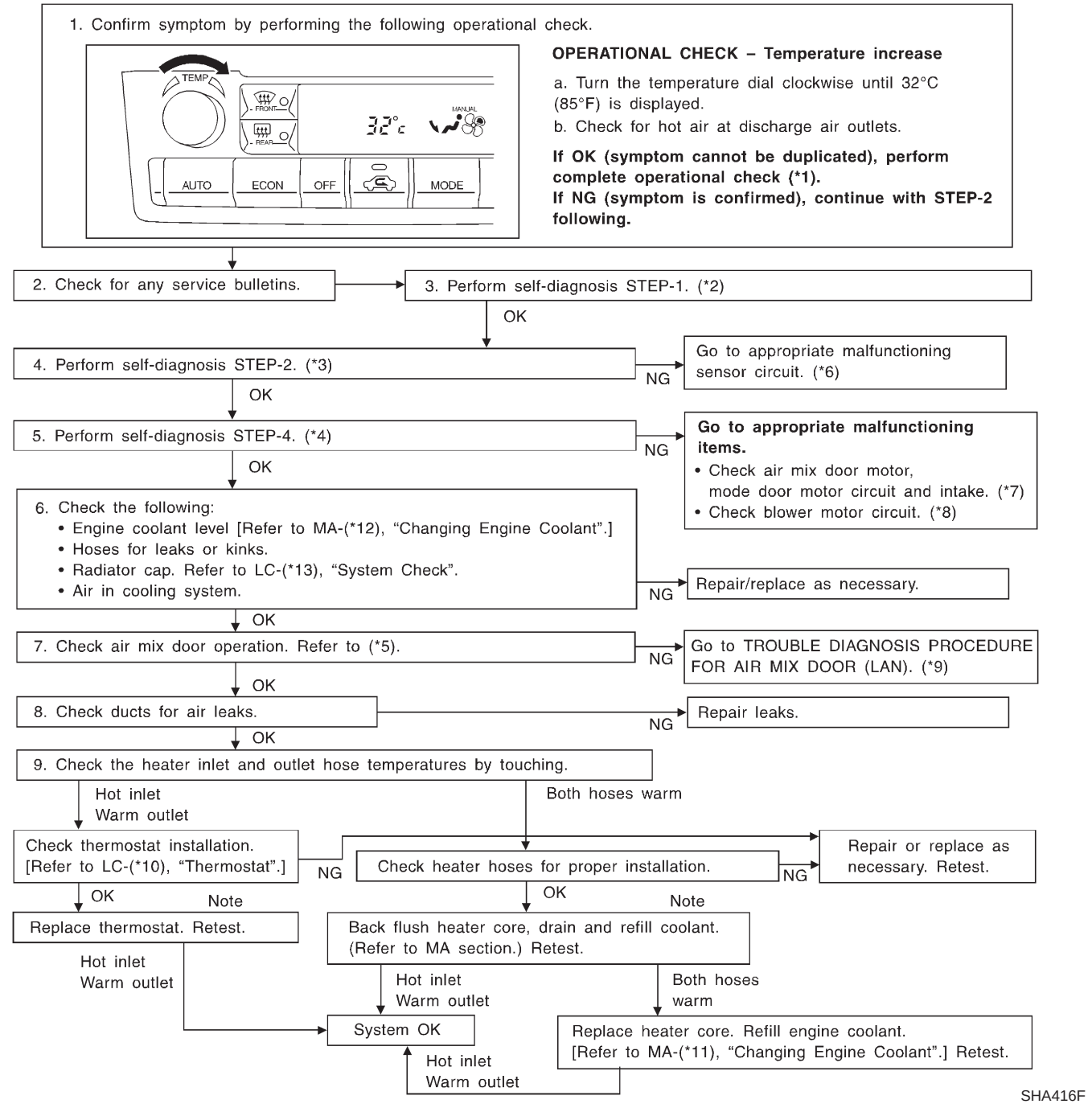

*1: HA-49
*2: HA-38
*3: HA-39
*4: HA-39
*5: HA-64
*6: FUNCTION CONFIRMATION PROCEDURE (HA-39), see No. 13.
*7: HA-58
*8: HA-71
*9: HA-62
*10: ***LC-16***
*11: ***MA-16***
*12: ***MA-16***
*13: ***LC-11***

Noise

TROUBLE DIAGNOSIS PROCEDURE FOR NOISE

=NFHA0210

SYMPTOM:

- **Noise**

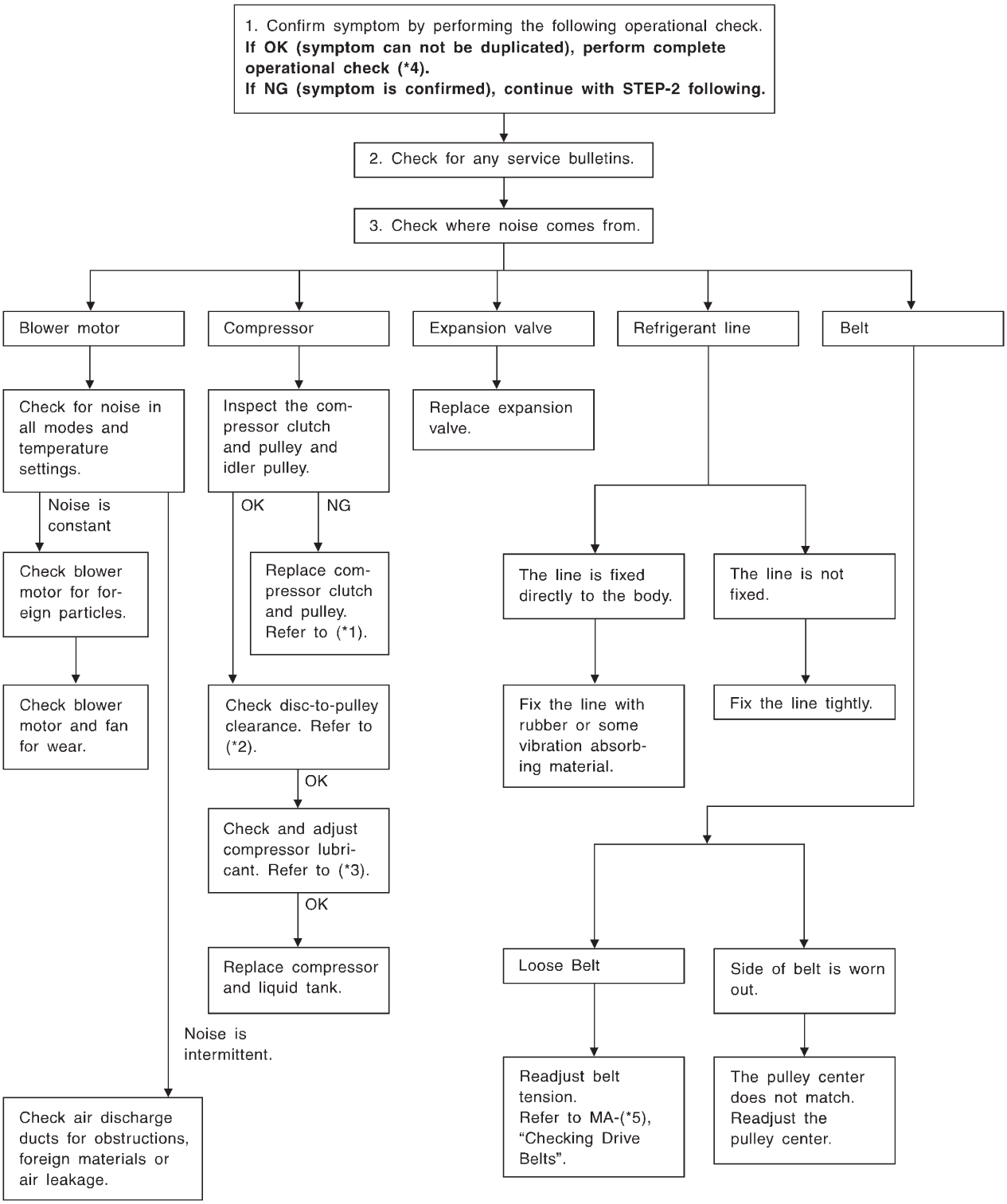

SHA331F

*1: HA-113
*2: HA-115
*3: HA-110
*4: HA-49
*5: ***MA-15***

Self-diagnosis

TROUBLE DIAGNOSIS PROCEDURE FOR SELF-DIAGNOSIS

=NFHA0211

SYMPTOM:

- **Self-diagnosis cannot be performed.**

INSPECTION FLOW

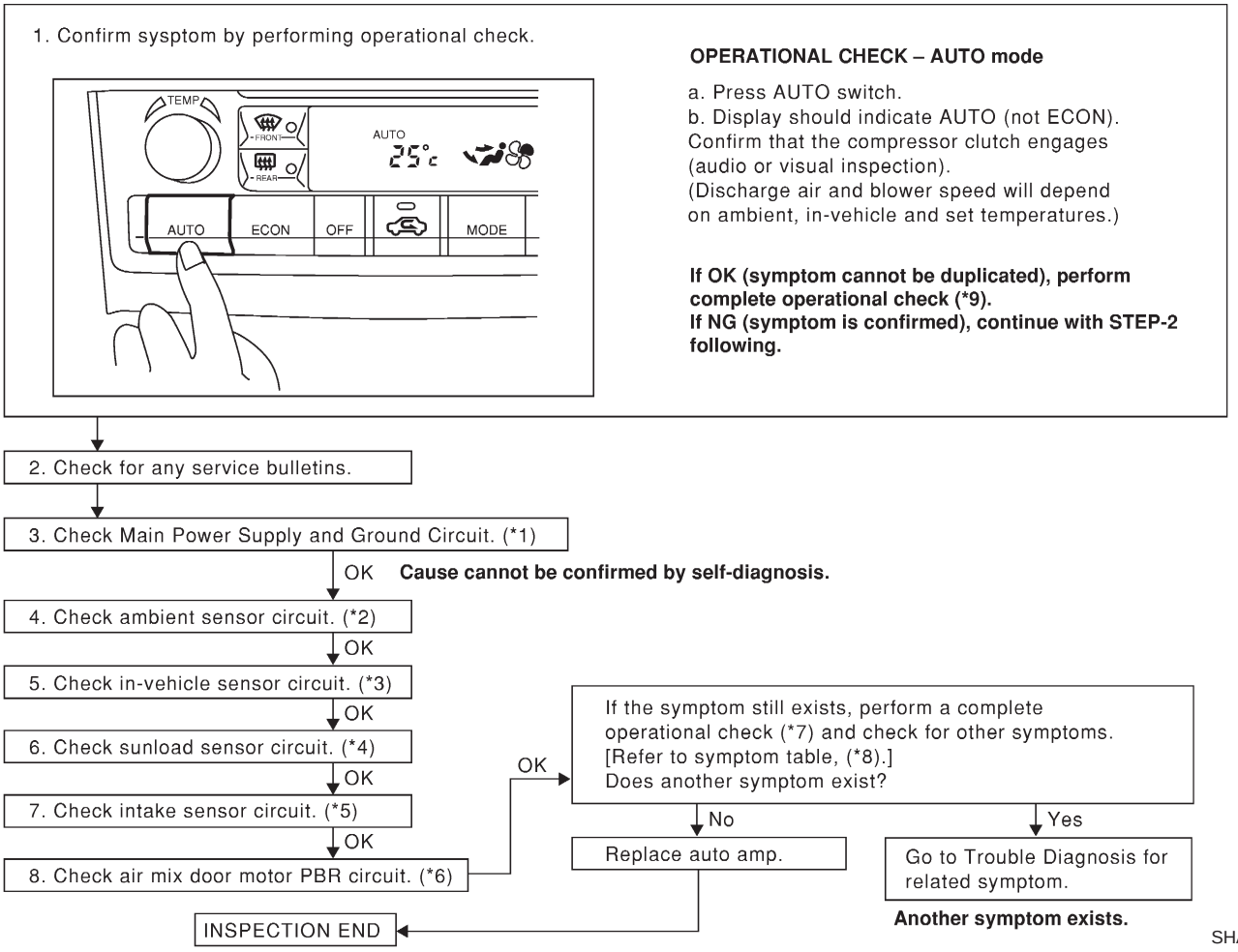

*1: HA-54	*4: HA-101	*7: HA-49
*2: HA-94	*5: HA-104	*8: HA-48
*3: HA-97	*6: HA-107	*9: HA-49

Memory Function

TROUBLE DIAGNOSIS PROCEDURE FOR MEMORY FUNCTION

=NFHA0212

SYMPTOM:

- **Memory function does not operate.**

INSPECTION FLOW

1. Confirm symptom by performing the following operational check.

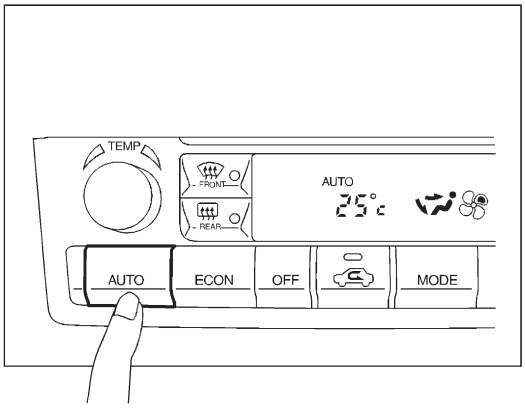

OPERATIONAL CHECK – Memory function

a. Set the temperature 75°F or 25°C.
b. Press OFF switch.
c. Turn the ignition off.
d. Turn the ignition on.
e. Press the AUTO switch.
f. Confirm that the set temperature remains at previous temperature.
g. Press OFF switch.

If OK (symptom cannot be duplicated), perform complete operational check (*2).
If NG (symptom is confirmed), continue with STEP-2 following.

↓

2. Check for any service bulletins.

↓

3. Check Main Power Supply and Ground Circuit. (*1)

↓ OK

Go to A/C system circuit. (*4)

↓ OK

4. Replace auto amp.

↓

5. FINAL CHECK
   Go to self-diagnosis step-by-step procedure (*3) and perform self-diagnosis STEP-2.
   Confirm that code No. 20 is displayed.

SHA414F

*1: HA-54
*2: HA-49
*3: HA-39
*4: HA-54

ECON (ECONOMY) Mode

TROUBLE DIAGNOSIS PROCEDURE FOR ECON (ECONOMY) MODE

=NFHA0213

SYMPTOM:

- **ECON mode does not operate.**

INSPECTION FLOW

1. Confirm symptom by performing the following operational check.

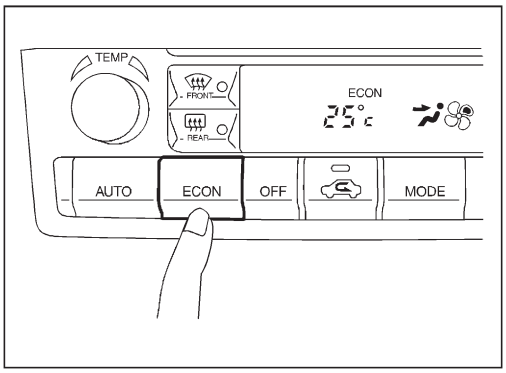

OPERATIONAL CHECK – ECON (ECONOMY) mode

a. Set the temperature 75°F or 25°C.
b. Press ECON switch.
c. Display should indicate ECON (not AUTO).
Confirm that the compressor clutch is not engaged (visual inspection).
(Discharge air and blower speed will depend on ambient, in-vehicle, and set temperatures.)

If OK (symptom cannot be duplicated), perform complete operational check (*2).
If NG (symptom is confirmed), continue with STEP-2 following.

2. Check for any service bulletins.
3. Check Main Power Supply and Ground Circuit. (*1)

OK

Go to A/C system circuit. (*4)

OK

4. Replace auto amp.
5. FINAL CHECK
   Go to self-diagnosis step-by-step procedure (*3) and perform self-diagnosis STEP-2.
   Confirm that code No. 20 is displayed.

SHA415F

*1: HA-54
*2: HA-49
*3: HA-39
*4: HA-54

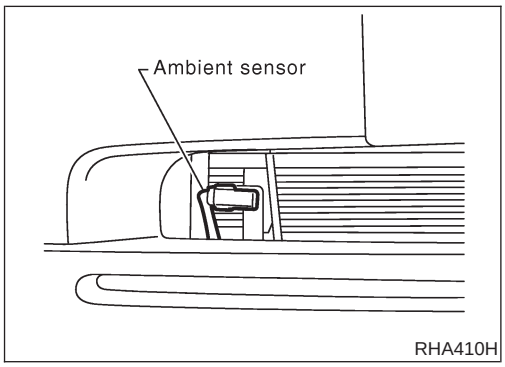

RHA410H

Ambient Sensor Circuit

COMPONENT DESCRIPTION

NFHA0214

The ambient sensor is attached in front of the right side condenser. It detects ambient temperature and converts it into a resistance value which is then input into the auto amplifier.

AMBIENT TEMPERATURE INPUT PROCESS

NFHA0215

The automatic amplifier includes a "processing circuit" for the ambient sensor input. However, when the temperature detected by the ambient sensor increases quickly, the processing circuit retards the auto amp. function. It only allows the auto amp. to recognize an ambient temperature increase of 0.33°C (0.6°F) per 100 seconds. As an example, consider stopping for a cup of coffee after high speed driving. Although the actual ambient temperature has not changed, the temperature detected by the ambient sensor will increase. This is because the heat from the engine compartment can radiate to the front grille area, location of the ambient sensor.

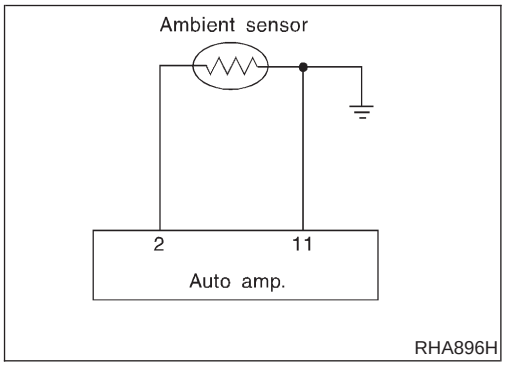

DIAGNOSTIC PROCEDURE

NFHA0216

SYMPTOM: Ambient sensor circuit is open or shorted. (21 or –21 is indicated on the display as a result of conducting Self-diagnosis STEP 2.)

1	CHECK VOLTAGE BETWEEN AMBIENT SENSOR HARNESS CONNECTOR AND BODY GROUND

Disconnect ambient sensor harness connector.
Do approx. 5 volts exist between ambient sensor harness terminal No. 1 and body ground?

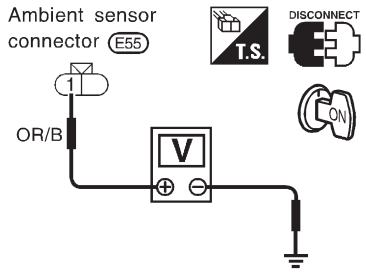

Yes or No

Yes	▶	GO TO 2.
No	▶	GO TO 4.

2	CHECK AMBIENT SENSOR CIRCUIT BETWEEN AMBIENT SENSOR AND AUTO AMP. (LCU)

1. Disconnect auto amp. (LCU) harness connector.
2. Check circuit continuity between ambient sensor harness terminal No. 2 and auto amp. (LCU) harness terminal No. 11.
3. Check circuit continuity between ambient sensor harness terminal No. 2 and body ground.

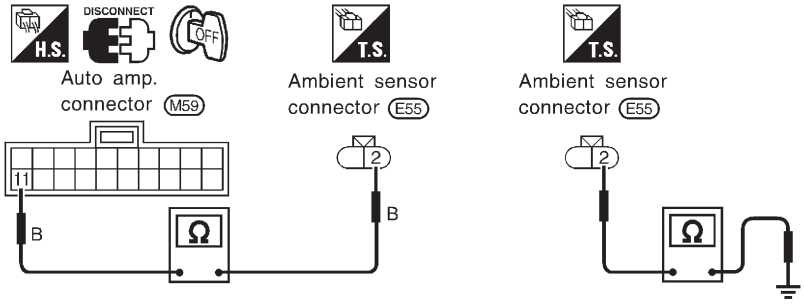

RHA813H

Continuity should exist.
If OK, check harness for short.

OK or NG

OK	▶	GO TO 3.
NG	▶	Repair harness or connector.

3	CHECK AMBIENT SENSOR

Refer to HA-97.

OK or NG

OK	▶	1. Replace auto amp. (LCU). 2. Go to "FUNCTION CONFIRMATION PROCEDURE", "Self-diagnosis", HA-39 and perform self-diagnosis STEP-2. Confirm that code No. 20 is displayed.
NG	▶	Replace ambient sensor.

4	CHECK AMBIENT SENSOR CIRCUIT BETWEEN AMBIENT SENSOR AND AUTO AMP. (LCU)

1. Disconnect auto amp. (LCU) harness connector.
2. Check circuit continuity between ambient sensor harness terminal No. 1 and auto amp. (LCU) harness terminal No. 2.

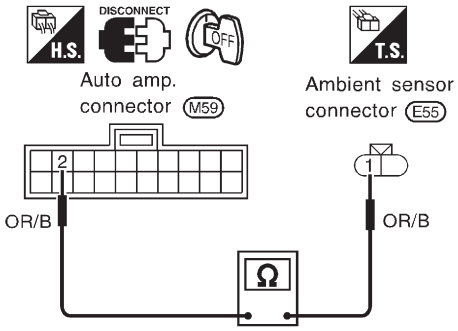

RHA564H

Continuity should exist.
If OK, check harness for short.

OK or NG

OK	▶	1. Replace auto amp. (LCU). 2. Go to "FUNCTION CONFIRMATION PROCEDURE", "Self-diagnosis", HA-39 and perform self-diagnosis STEP-2. Confirm that code No. 20 is displayed.
NG	▶	Repair harness or connector.

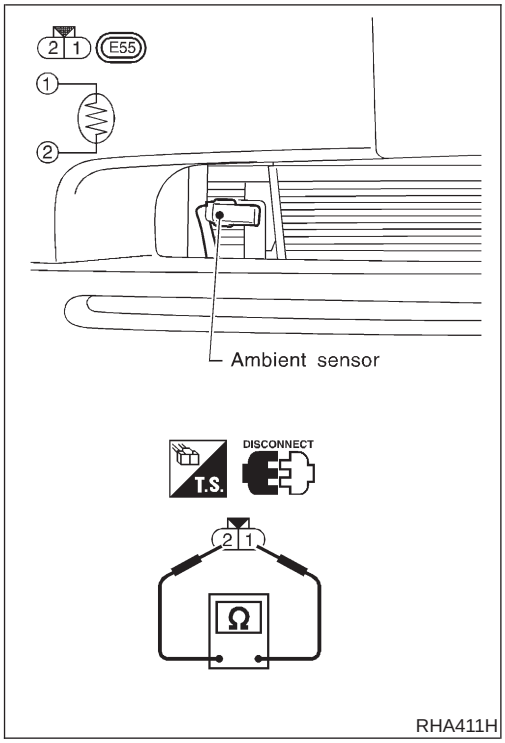

COMPONENT INSPECTION

NFHA0217

Ambient Sensor

NFHA0217S01

After disconnecting ambient sensor harness connector, measure resistance between terminals 2 and 1 at sensor harness side, using the table below.

Temperature °C (°F)	Resistance kΩ
−15 (5)	12.73
−10 (14)	9.92
−5 (23)	7.80
0 (32)	6.19
5 (41)	4.95
10 (50)	3.99
15 (59)	3.24
20 (68)	2.65
25 (77)	2.19
30 (86)	1.81
35 (95)	1.51
40 (104)	1.27
45 (113)	1.07

If NG, replace ambient sensor.

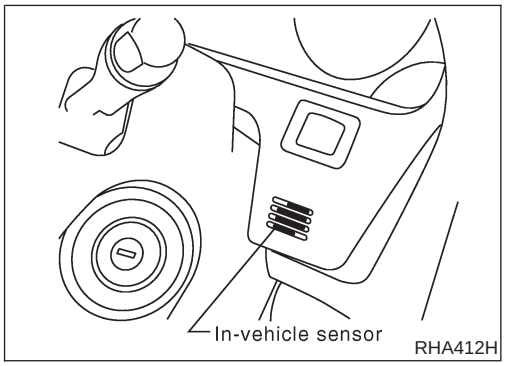

In-vehicle Sensor Circuit

COMPONENT DESCRIPTION

NFHA0218

In-vehicle sensor

NFHA0218S01

The in-vehicle sensor is located on instrument lower panel. It converts variations in temperature of compartment air drawn from the aspirator into a resistance value. It is then input into the auto amplifier.

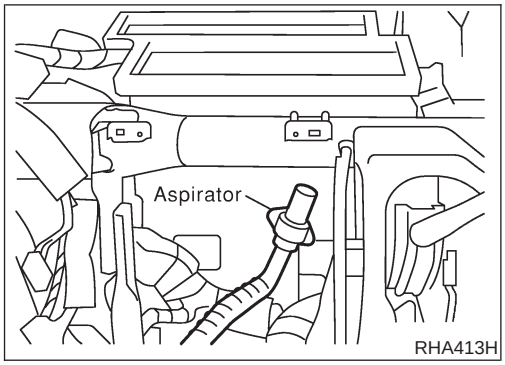

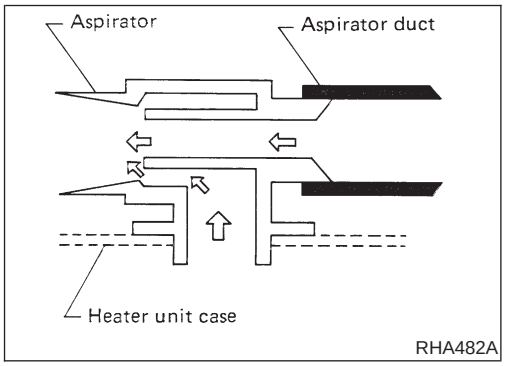

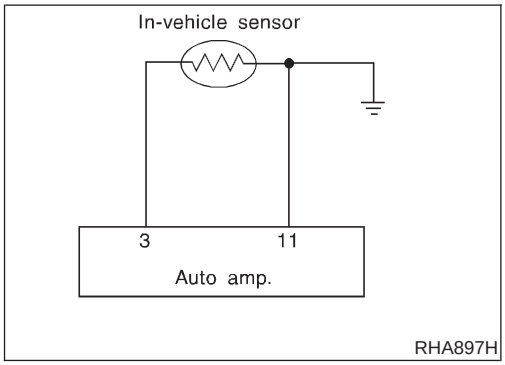

Aspirator

NFHA0218S02

The aspirator is located in front of heater unit. It produces vacuum pressure due to air discharged from the heater unit, continuously taking compartment air in the aspirator.

DIAGNOSTIC PROCEDURE

NFHA0219

SYMPTOM: In-vehicle sensor circuit is open or shorted. (22 or –22 is indicated on the display as a result of conducting Self-diagnosis STEP 2.)

1	CHECK IN-VEHICLE SENSOR CIRCUIT BETWEEN IN-VEHICLE SENSOR AND BODY GROUND

Disconnect in-vehicle sensor harness connector.
Do approx. 5 volts exist between in-vehicle sensor harness terminal No. 1 and body ground?

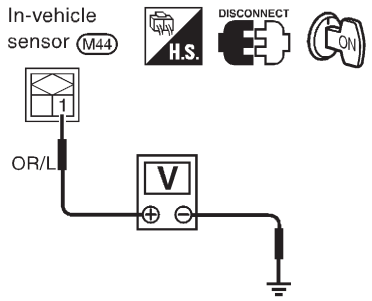

Yes or No

Yes	▶	GO TO 2.
No	▶	GO TO 4.

2	CHECK IN-VEHICLE SENSOR CIRCUIT BETWEEN IN-VEHICLE SENSOR AND AUTO AMP. (LCU)

1. Disconnect auto amp. (LCU) harness connector.
2. Check circuit continuity between in-vehicle sensor harness terminal No. 2 and auto amp. (LCU) harness terminal No. 11.
3. Check circuit continuity between in-vehicle sensor harness terminal No. 2 and body ground.

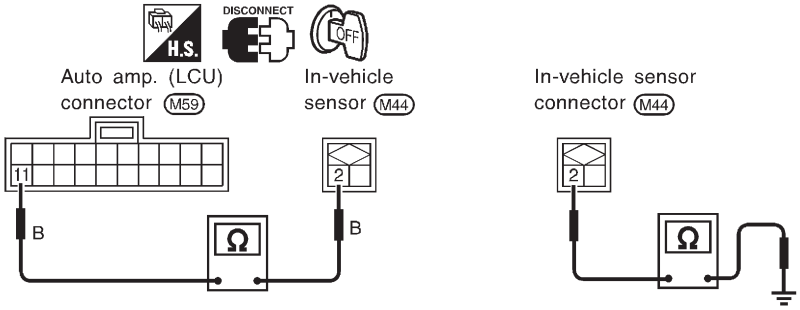

RHA814H

Continuity should exist.

If OK, check harness for short.

OK or NG

OK	▶	GO TO 3.
NG	▶	Repair harness or connector.

3	CHECK IN-VEHICLE SENSOR

Refer to HA-100.

OK or NG

OK	▶	1. Replace auto amp. 2. Go to "FUNCTION CONFIRMATION PROCEDURE", "Self-diagnosis", HA-39 and perform self-diagnosis STEP-2. Confirm that code No. 20 is displayed.
NG	▶	1. Replace in-vehicle sensor. 2. Go to "FUNCTION CONFIRMATION PROCEDURE", "Self-diagnosis", HA-39 and perform self-diagnosis STEP-2. Confirm that code No. 20 is displayed.

4	CHECK IN-VEHICLE SENSOR CIRCUIT BETWEEN AMBIENT SENSOR AND AUTO AMP. (LCU)

1. Disconnect auto amp. (LCU) harness connector.
2. Check circuit continuity between in-vehicle sensor harness terminal No. 1 and auto amp. (LCU) harness terminal No. 3.

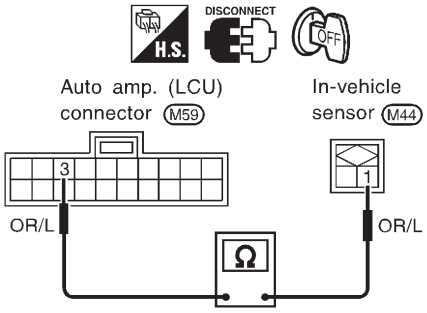

RHA479GC

Continuity should exist.
If OK, check harness for short.

OK or NG

OK	▶	1. Replace auto amp. (LCU). 2. Go to "FUNCTION CONFIRMATION PROCEDURE", "Self-diagnosis", HA-39 and perform self-diagnosis STEP-2. Confirm that code No. 20 is displayed.
NG	▶	Repair harness or connector.

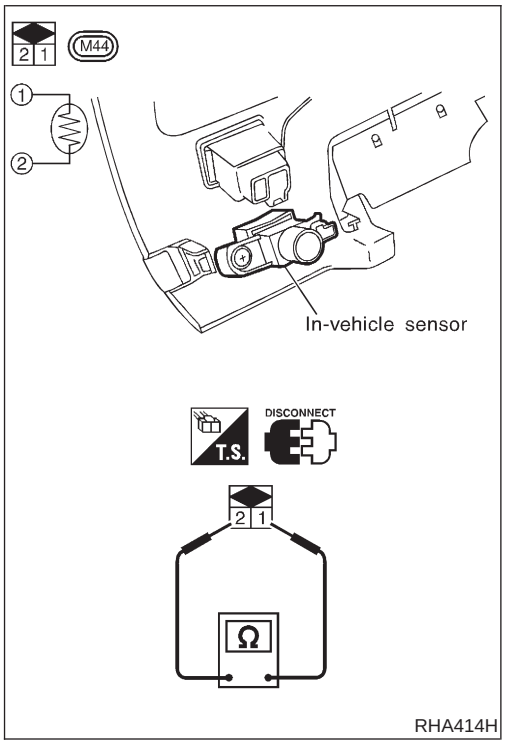

RHA414H

COMPONENT INSPECTION

NFHA0220

In-vehicle Sensor

NFHA0220S01

After disconnecting in-vehicle sensor harness connector, measure resistance between terminals 1 and 2 at sensor harness side, using the table below.

Temperature °C (°F)	Resistance kΩ
−15 (5)	12.73
−10 (14)	9.92
−5 (23)	7.80
0 (32)	6.19
5 (41)	4.95
10 (50)	3.99
15 (59)	3.24
20 (68)	2.65
25 (77)	2.19
30 (86)	1.81
35 (95)	1.51
40 (104)	1.27
45 (113)	1.07

If NG, replace in-vehicle sensor.

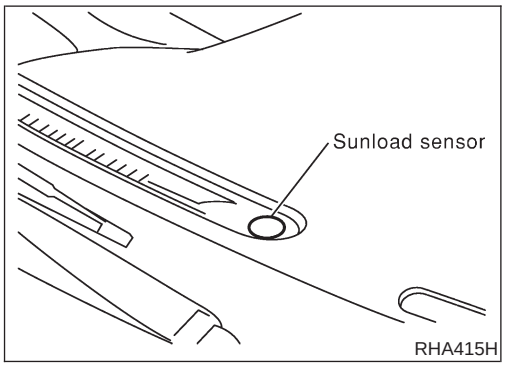

Sunload Sensor Circuit

COMPONENT DESCRIPTION

NFHA0221

The sunload sensor is located on the right defroster grille. It detects sunload entering through windshield by means of a photo diode. The sensor converts the sunload into a current value which is then input into the auto amplifier.

SUNLOAD INPUT PROCESS

NFHA0222

The auto amp. also includes a processing circuit which "average" the variations in detected sunload over a period of time. This prevents drastic swings in the ATC system operation due to small or quick variations in detected sunload.

For example, consider driving along a road bordered by an occasional group of large trees. The sunload detected by the sunload sensor will vary whenever the trees obstruct the sunlight. The processing circuit averages the detected sunload over a period of time, so that the (insignificant) effect of the trees momentarily obstructing the sunlight does not cause any change in the ATC system operation. On the other hand, shortly after entering a long tunnel, the system will recognize the change in sunload, and the system will react accordingly.

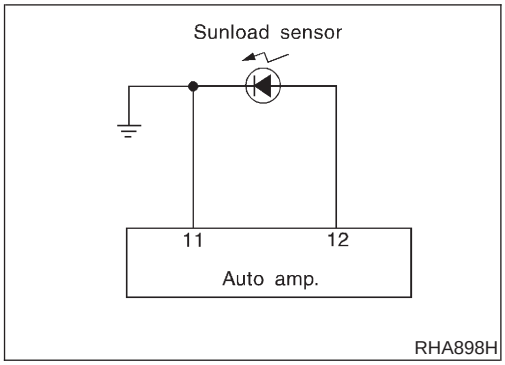

DIAGNOSTIC PROCEDURE

NEHA0223

SYMPTOM: Sunload sensor circuit is open or shorted. (25 or –25 is indicated on the display as a result of conducting Self-diagnosis STEP 2.)

1	CHECK SUNLOAD SENSOR CIRCUIT BETWEEN SUNLOAD SENSOR AND BODY GROUND

Disconnect sunload sensor harness connector.
Do approx. 5 volts exist between sunload sensor harness terminal No. 1 and body ground?

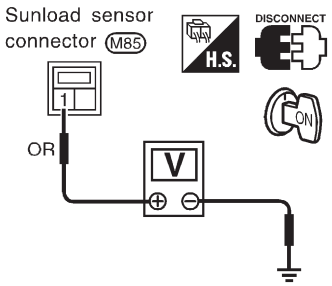

Yes or No

Yes	▶	GO TO 2.
No	▶	GO TO 4.

2	CHECK SUNLOAD SENSOR CIRCUIT BETWEEN SUNLOAD SENSOR AND AUTO AMP. (LCU)

1. Disconnect auto amp. (LCU) harness connector.
2. Check circuit continuity between sunload sensor harness terminal No. 2 and auto amp. (LCU) harness terminal No. 11.
3. Check circuit continuity between sunload sensor harness terminal No. 2 and body ground.

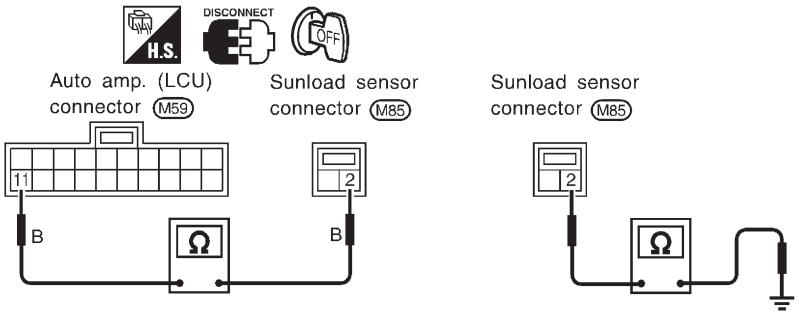

Continuity should exist.
If OK, check harness for short.

OK or NG

OK	▶	GO TO 3.
NG	▶	Repair harness or connector.

3	CHECK SUNLOAD SENSOR
Refer to HA-104.	
	OK or NG
OK ▶	1. Replace auto amp. (LCU). 2. Go to "FUNCTION CONFIRMATION PROCEDURE", "Self-diagnosis", HA-39 and perform self-diagnosis STEP-2. Confirm that code No. 20 is displayed.
NG ▶	1. Replace sunload sensor. 2. Go to "FUNCTION CONFIRMATION PROCEDURE", "Self-diagnosis", HA-39 and perform self-diagnosis STEP-2. Confirm that code No. 20 is displayed.

4	CHECK SUNLOAD SENSOR CIRCUIT BETWEEN SUNLOAD SENSOR AND AUTO AMP. (LCU)
1. Disconnect auto amp. (LCU) harness connector. 2. Check circuit continuity between sunload sensor harness terminal No. 1 and auto amp. (LCU) harness terminal No. 12.	

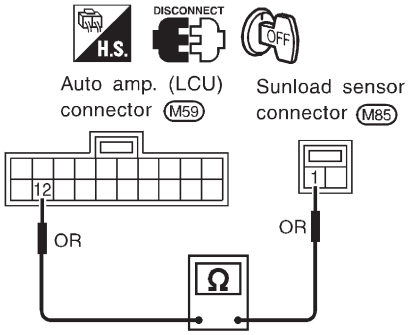

RHA484GC

Continuity should exist.
If OK, check harness for short.

	OK or NG
OK ▶	1. Replace auto amp. 2. Go to "FUNCTION CONFIRMATION PROCEDURE", "Self-diagnosis", HA-39 and perform self-diagnosis STEP-2. Confirm that code No. 20 is displayed.
NG ▶	Repair harness or connector.

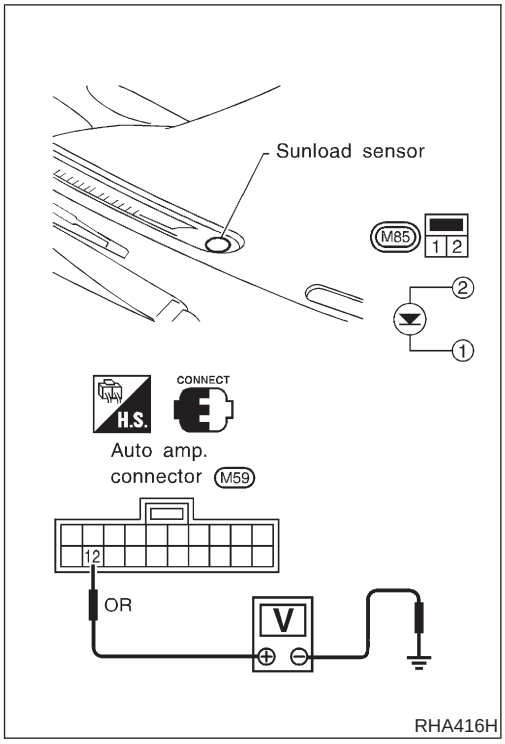

RHA416H

COMPONENT INSPECTION

NFHA0224

Sunload Sensor

NFHA0224S01

Measure voltage between auto amp. terminal 12 and body ground. If NG, replace sunload sensor.

- **When checking sunload sensor, select a place where sun shines directly on it.**

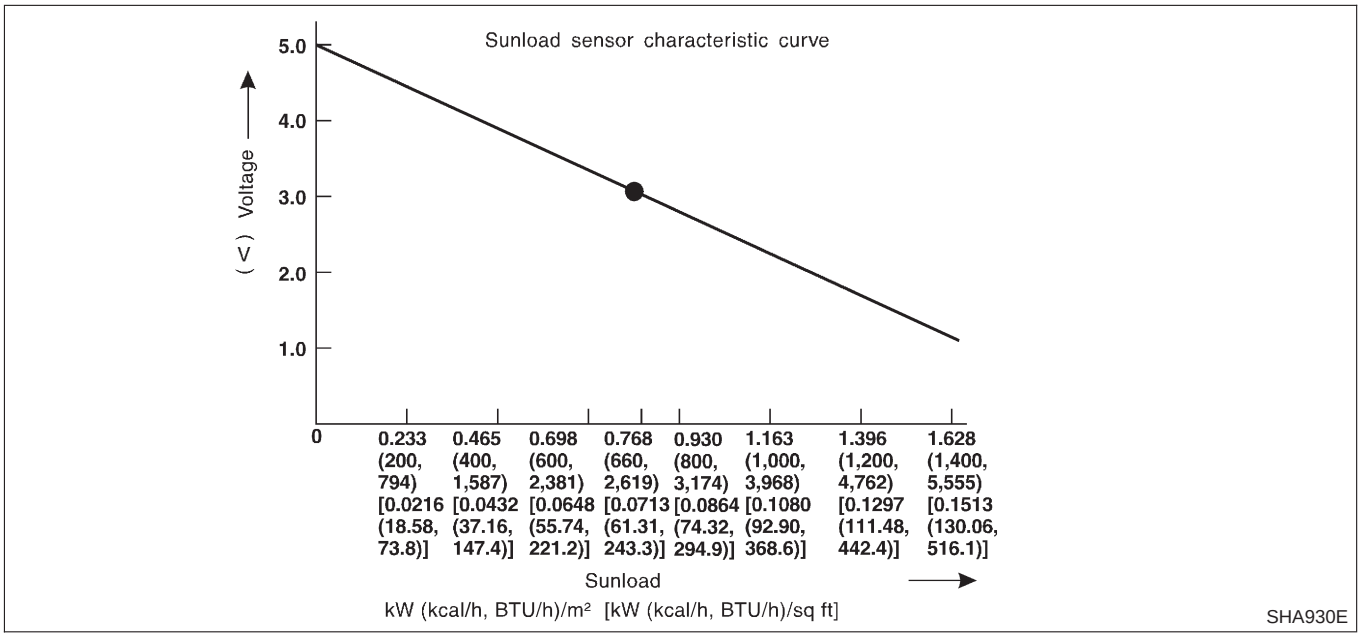

SHA930E

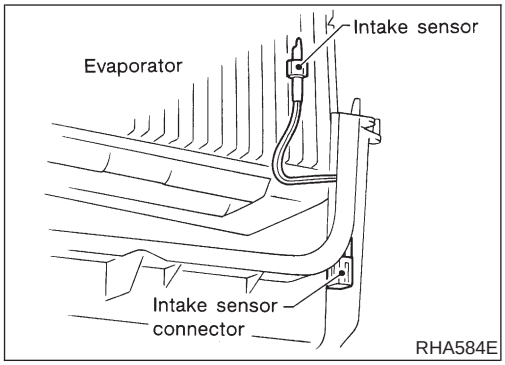

RHA584E

Intake Sensor Circuit

COMPONENT DESCRIPTION

NFHA0225

Intake Sensor

NFHA0225S01

The intake sensor is located on the cooling unit. It converts temperature of air after it passes through the evaporator into a resistance value which is then input to the auto amp.

After disconnecting intake sensor harness connector, measure resistance between terminals 1 and 2 at sensor harness side, using the table below.

Temperature °C (°F)	Resistance kΩ
−15 (5)	12.73
−10 (14)	9.92
−5 (23)	7.80
0 (32)	6.19
5 (41)	4.95
10 (50)	3.99
15 (59)	3.24
20 (68)	2.65
25 (77)	2.19
30 (86)	1.81
35 (95)	1.51
40 (104)	1.27
45 (113)	1.07

If NG, replace intake sensor.

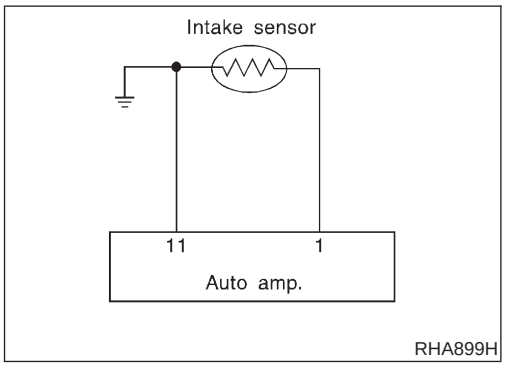

DIAGNOSTIC PROCEDURE

NFHA0226

SYMPTOM: Intake sensor circuit is open or shorted. (24 or −24 is indicated on the display as a result of conducting Self-diagnosis STEP 2.)

1	CHECK INTAKE SENSOR CIRCUIT BETWEEN INTAKE SENSOR AND BODY GROUND

Disconnect intake sensor harness connector.
Do approx. 5 volts exist between intake sensor harness terminal No. 1 and body ground?

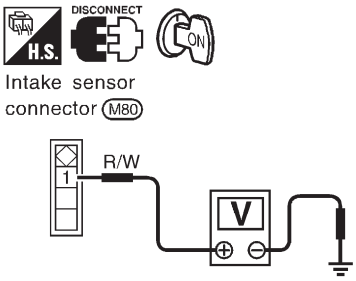

Yes or No

Yes	▶	GO TO 2.
No	▶	GO TO 4.

2	CHECK INTAKE SENSOR CIRCUIT BETWEEN INTAKE SENSOR AND AUTO AMP. (LCU)

1. Disconnect auto amp. (LCU) harness connector.
2. Check circuit continuity between intake sensor harness terminal No. 2 and auto amp. (LCU) harness terminal No. 11.
3. Check circuit continuity between intake sensor harness terminal No. 2 and body ground.

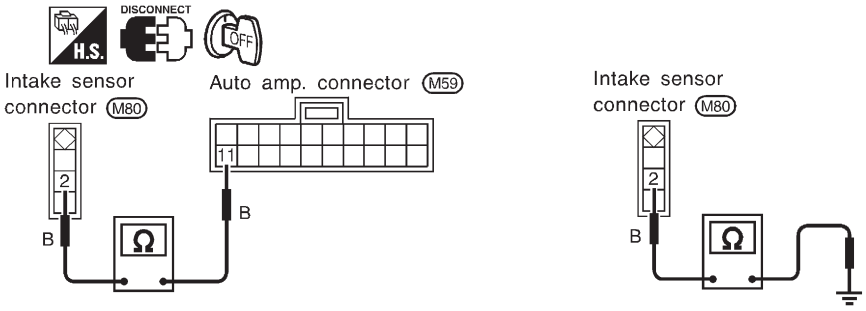

RHA566HA

Continuity should exist.
If OK, check harness for short.

OK or NG

OK	▶	GO TO 3.
NG	▶	Repair harness or connector.

3	CHECK INTAKE SENSOR

Refer to HA-104.

OK or NG

OK	▶	1. Replace auto amp. 2. Go to "FUNCTION CONFIRMATION PROCEDURE", "Self-diagnosis", HA-39 and perform self-diagnosis STEP-2. Confirm that code No. 20 is displayed.
NG	▶	1. Replace intake sensor. 2. Go to "FUNCTION CONFIRMATION PROCEDURE", "Self-diagnosis", HA-39 and perform self-diagnosis STEP-2. Confirm that code No. 20 is displayed.

4	CHECK INTAKE SENSOR CIRCUIT BETWEEN AMBIENT SENSOR AND AUTO AMP. (LCU)

1. Disconnect auto amp. (LCU) harness connector.
2. Check circuit continuity between intake sensor harness terminal No. 1 and auto amp. (LCU) harness terminal No. 1.

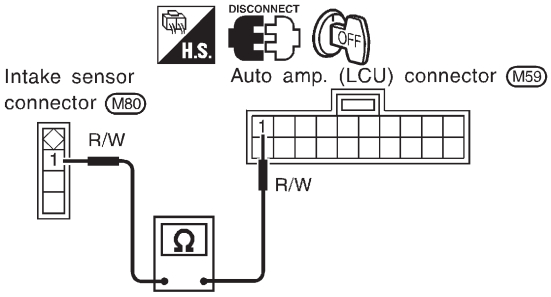

RHA419H

Continuity should exist.
If OK, check harness for short.

OK or NG

OK	▶	1. Replace auto amp. 2. Go to "FUNCTION CONFIRMATION PROCEDURE", "Self-diagnosis", HA-39 and perform self-diagnosis STEP-2. Confirm that code No. 20 is displayed.
NG	▶	Repair harness or connector.

Air Mix Door Motor PBR Circuit

DIAGNOSTIC PROCEDURE

NFHA0227

For description of air mix door motor, mode door motor and intake door motor circuit, refer to HA-63.

SYMPTOM: If PBR circuit is open or shorted. (–26 or 26 is indicated on the display as a result of conducting Self-diagnosis STEP 2.)

Perform diagnostic procedure for air mix door motor, mode door motor and intake. Refer to HA-58.

HFC-134a (R-134a) Service Procedure

NFHA0228

SETTING OF SERVICE TOOLS AND EQUIPMENT

NFHA0228S01

Discharging Refrigerant

NFHA0228S0101

WARNING:

Avoid breathing A/C refrigerant and lubricant vapor or mist. Exposure may irritate eyes, nose and throat. Use only approved recovery/recycling equipment to discharge HFC-134a (R-134a) refrigerant. If accidental system discharge occurs, ventilate work area before resuming service. Additional health and safety information may be obtained from refrigerant and lubricant manufacturers.

Example

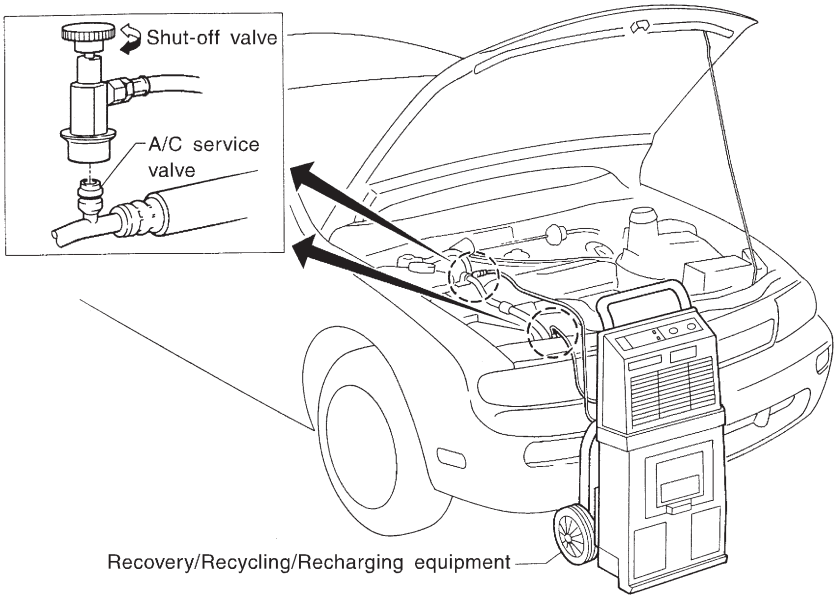

SHA539DE

Evacuating System and Charging Refrigerant

NFHA0228S0102

Example

Preferred (Best) method

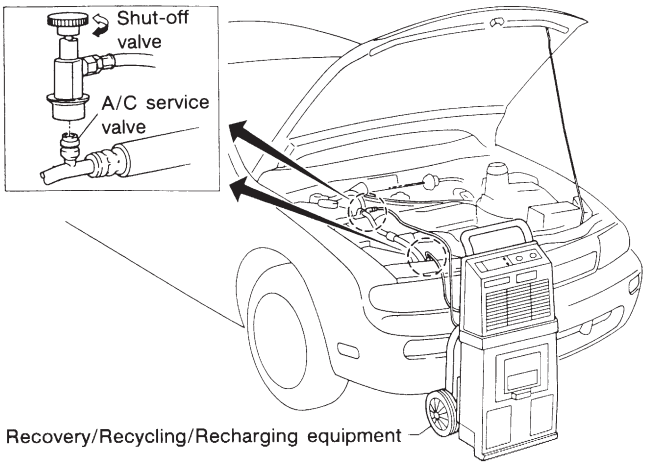

Alternate method

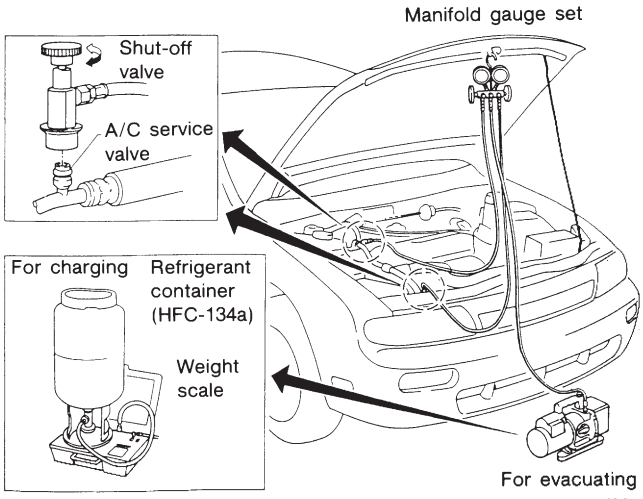

SHA540DC

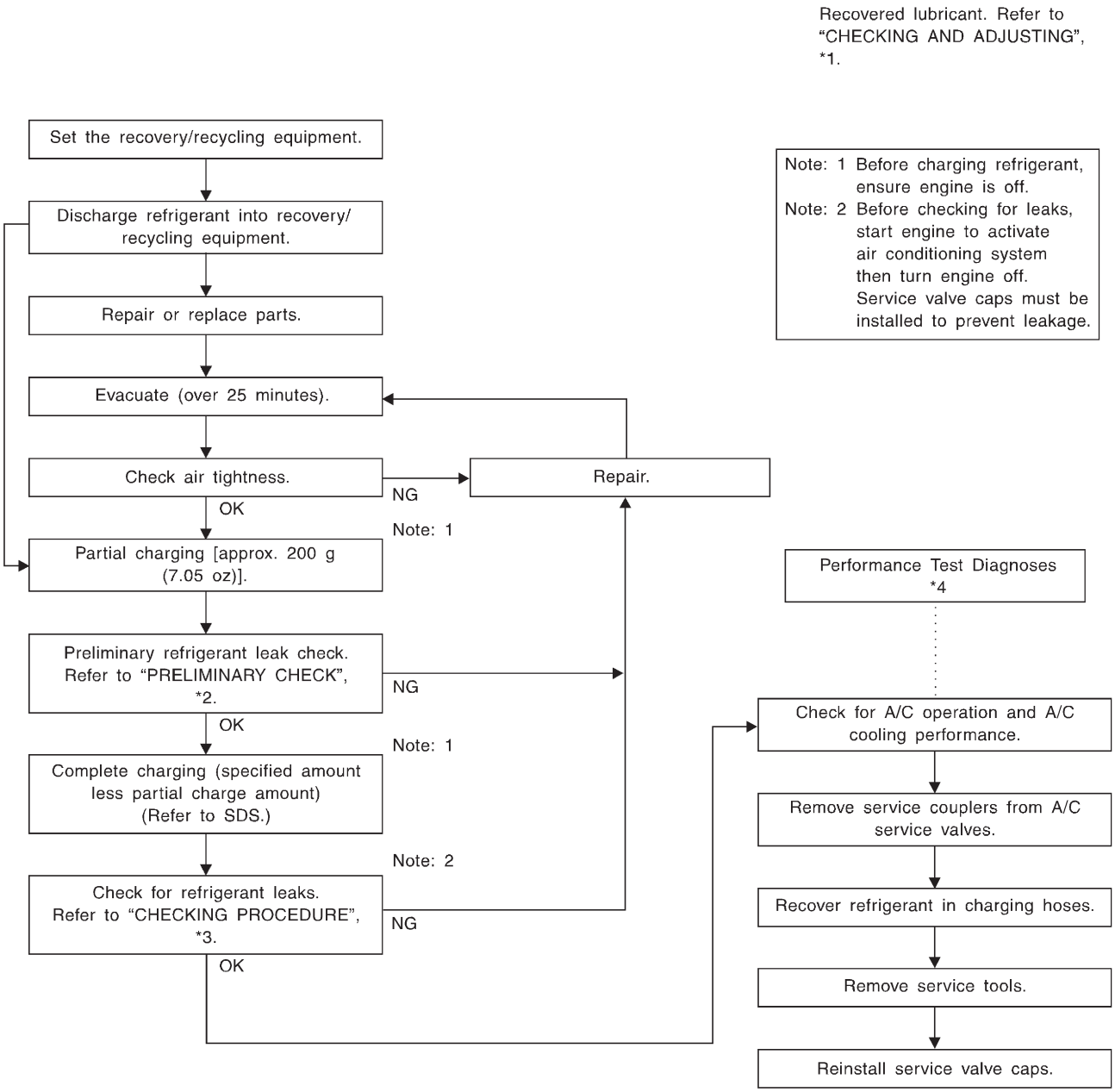

SHA383F

*1: HA-110
*2: HA-121
*3: HA-122
*4: HA-83

Maintenance of Lubricant Quantity in Compressor

NFHA0229

The lubricant in the compressor circulates through the system with the refrigerant. Add lubricant to compressor when replacing any component or after a large gas leakage occurred. It is important to maintain the specified amount. If lubricant quantity is not maintained properly, the following malfunctions may result:

- Lack of lubricant: May lead to a seized compressor
- Excessive lubricant: Inadequate cooling (thermal exchange interference)

LUBRICANT

NFHA0229S01

Name: Nissan A/C System Oil Type S
Part number: KLH00-PAGS0

CHECKING AND ADJUSTING

NFHA0229S02

Adjust the lubricant quantity according to the test group shown below.

1	CHECK LUBRICANT RETURN OPERATION
Can lubricant return operation be performed? ● A/C system works properly. ● There is no evidence of a large amount of lubricant leakage.	
Yes or No	
Yes ▶	GO TO 2.
No ▶	GO TO 3.

2	PERFORM LUBRICANT RETURN OPERATION, PROCEEDING AS FOLLOWS:
1. Start engine, and set the following conditions: **Test condition** **Engine speed: Idling to 1,200 rpm** **A/C or AUTO switch: ON** **Blower speed: Max. position** **Temp. control: Optional [Set so that intake air temperature is 25 to 30°C (77 to 86°F).]** 2. **Next item is for V-6 compressor. Connect the manifold gauge, and check that the high pressure side pressure is 588 kPa (5.9 bar, 6 kg/cm^2, 85 psi) or higher.** **If less than the reference level, attach a cover to the front face of the condenser to raise the pressure.** 3. Perform lubricant return operation for about 10 minutes. 4. Stop engine. **CAUTION:** **If excessive lubricant leakage is noted, do not perform the lubricant return operation.**	
OK ▶	GO TO 3.

3	CHECK COMPRESSOR
Should the compressor be replaced?	
Yes or No	
Yes ▶	Go to “Lubricant Adjustment Procedure for Compressor Replacement”, (HA-111).
No ▶	GO TO 4.

4	CHECK ANY PART	
Is there any part to be replaced? (Evaporator, condenser, liquid tank or in case there is evidence of a large amount of lubricant leakage.)		
	Yes or No	
Yes	▶	Go to "Lubricant Adjusting Procedure for Components Replacement Except Compressor", (HA-111).
No	▶	Carry out the A/C performance test.

Lubricant Adjusting Procedure for Components Replacement Except Compressor

NFHA0229S0201

After replacing any of the following major components, add the correct amount of lubricant to the system.
Amount of lubricant to be added

Part replaced	Lubricant to be added to system	Remarks
	Amount of lubricant mℓ (Imp fl oz)	
Evaporator	75 (2.6)	—
Condenser	75 (2.6)	—
Liquid tank	5 (0.2)	Add if compressor is not replaced. *1
In case of refrigerant leak	30 (1.1)	Large leak
	—	Small leak *2

*1: If compressor is replaced, addition of lubricant is included in the table.
*2: If refrigerant leak is small, no addition of lubricant is needed.

Lubricant Adjusting Procedure for Compressor Replacement

NFHA0229S0202

1. Discharge refrigerant into the refrigerant recovery/recycling equipment. Measure lubricant discharged into the recovery/recycling equipment.
2. Remove the drain plug of the "old" (removed) compressor. Drain the lubricant into a graduated container and record the amount of drained lubricant.
3. Remove the drain plug and drain the lubricant from the "new" compressor into a separate, clean container.
4. Measure an amount of new lubricant installed equal to amount drained from "old" compressor. Add this lubricant to "new" compressor through the suction port opening.
5. Measure an amount of new lubricant equal to the amount recovered during discharging. Add this lubricant to "new" compressor through the suction port opening.
6. Torque the drain plug.
   18 - 19 N·m (1.8 - 1.9 kg-m, 13 - 14 ft-lb)
7. If the liquid tank also needs to be replaced, add an additional 5 mℓ (0.2 Imp fl oz) of lubricant at this time.
   Do not add this 5 mℓ (0.2 Imp fl oz) of lubricant if only replacing the compressor.

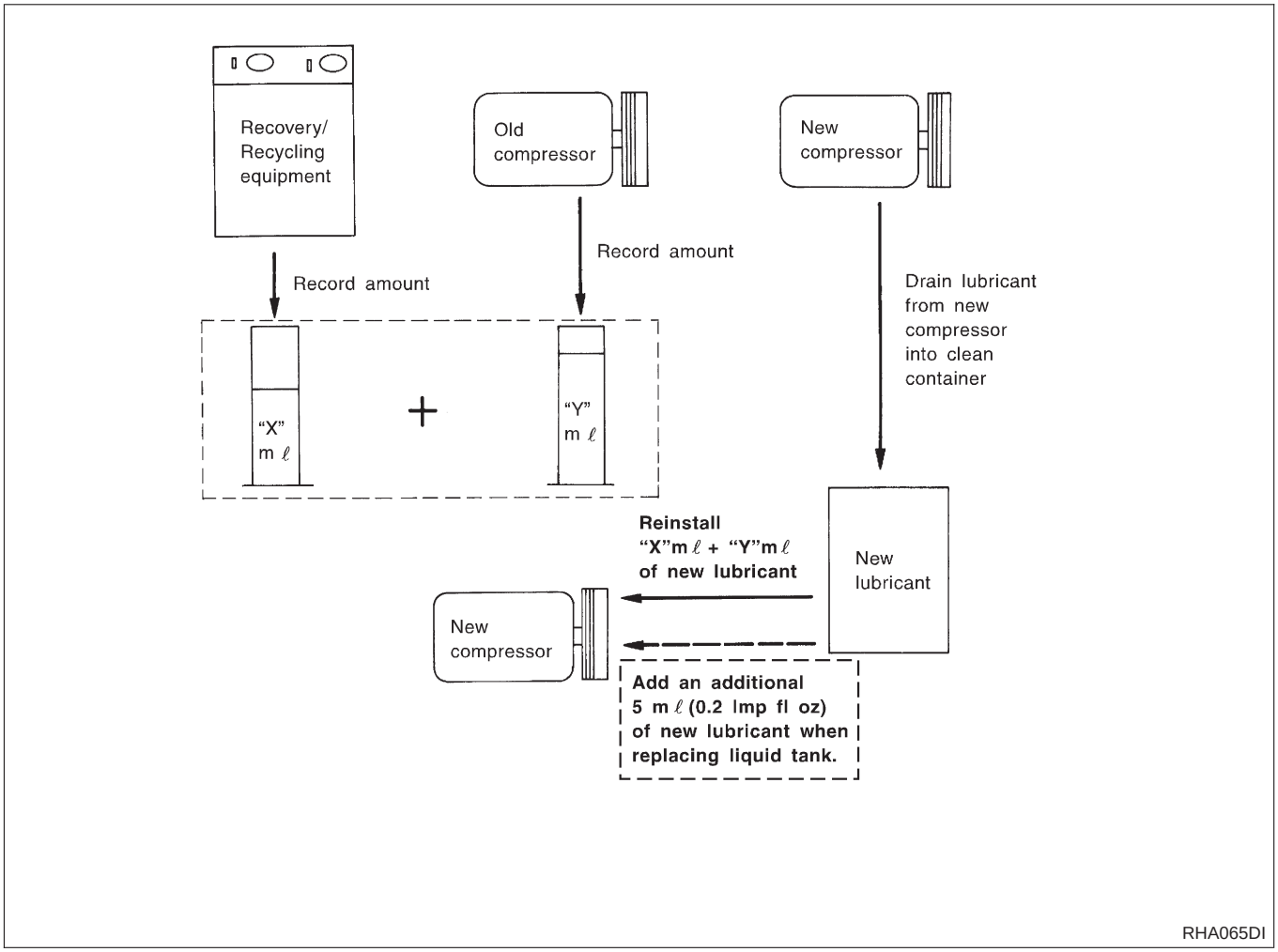
Recovery/
Recycling
equipment
Old
compressor
New
compressor
Record amount
Record amount
Drain lubricant
from new
compressor
into clean
container
"X"
m ℓ
+
"Y"
m ℓ
Reinstall
"X"mℓ + "Y"mℓ
of new lubricant
New
lubricant
New
compressor
Add an additional
5 mℓ (0.2 Imp fl oz)
of new lubricant when
replacing liquid tank.
RHA065DI

Compressor

REMOVAL AND INSTALLATION

NFHA0230

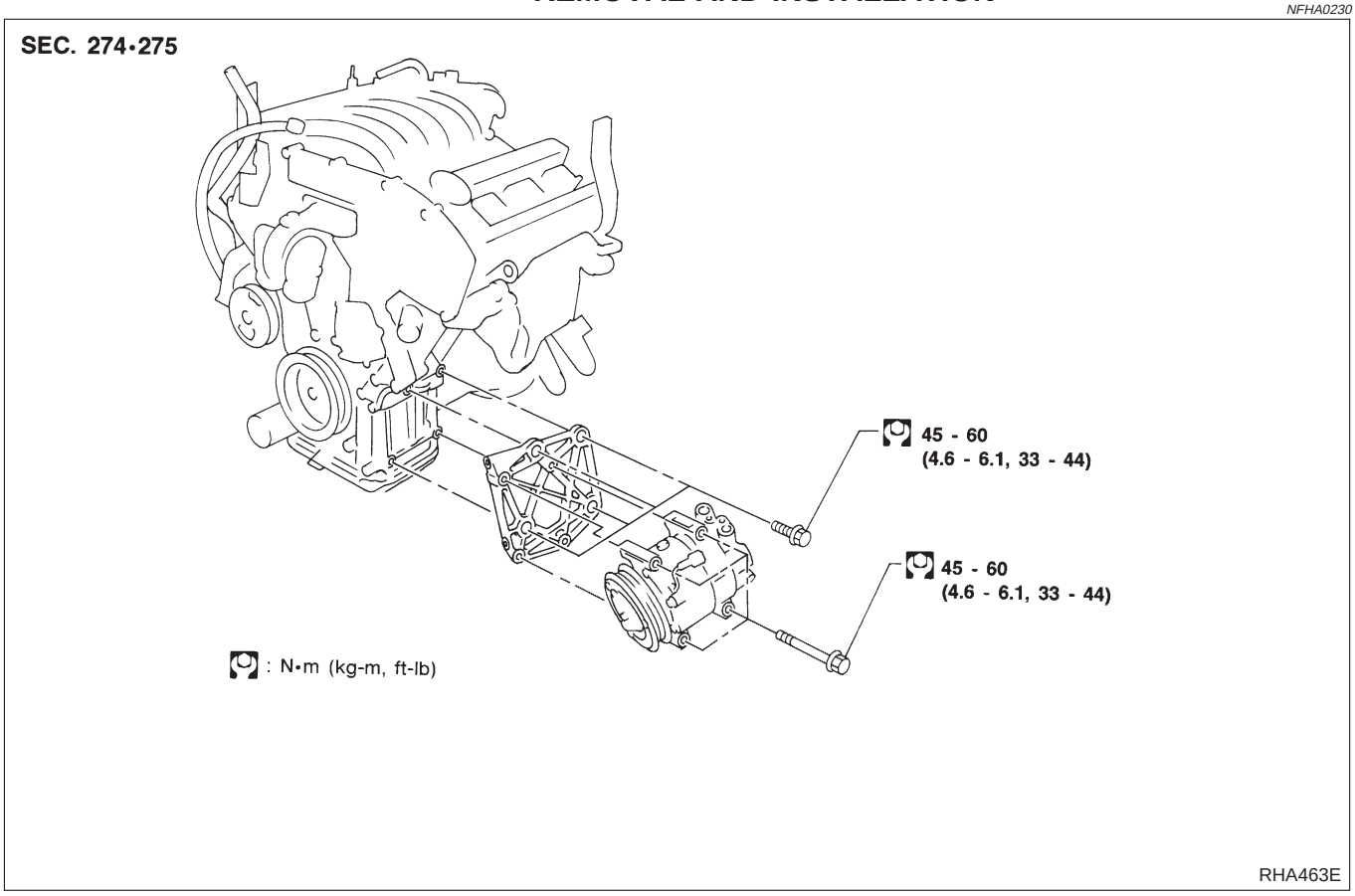

Compressor Clutch

OVERHAUL

NFHA0231

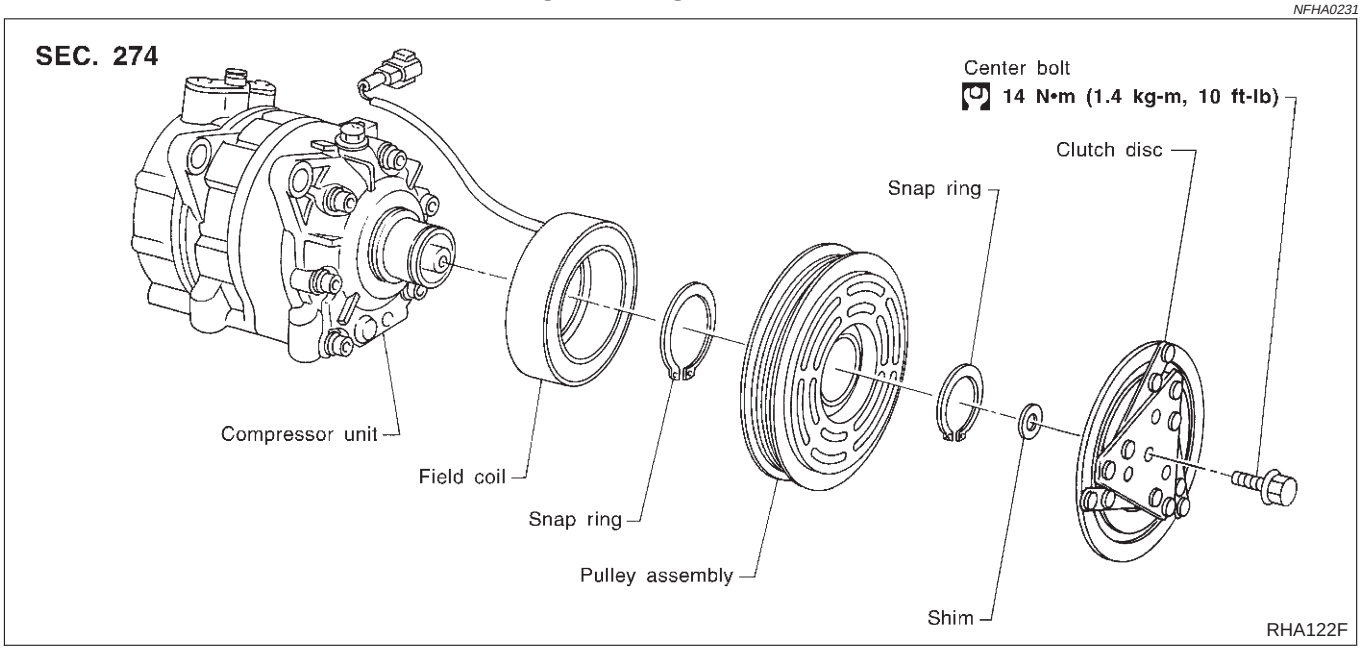

REMOVAL

NFHA0232

- When removing center bolt, hold clutch disc with clutch disc wrench.

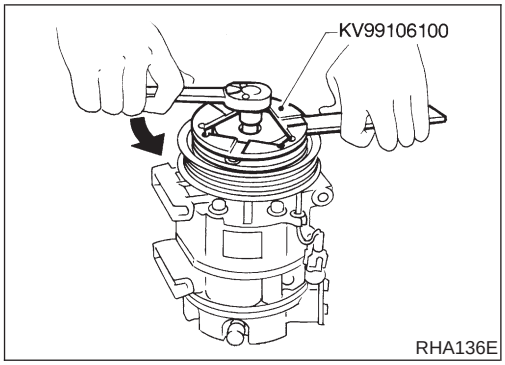

RHA136E

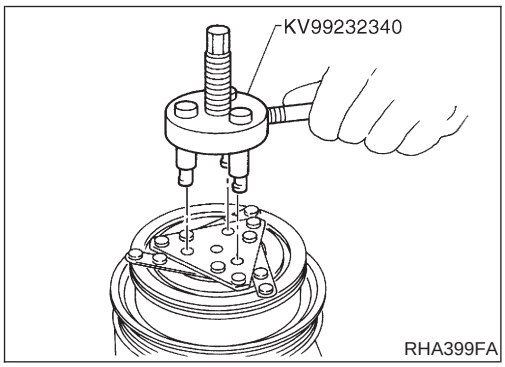

RHA399FA

- Remove the clutch disc using the clutch disc puller.
  Insert the holder's three pins into the holes in the clutch disc. Rotate the holder clockwise to hook it onto the plate. Then, tighten the center bolt to remove the clutch disc.
  After removing the clutch disc, remove the shims from either the drive shaft or the clutch disc.

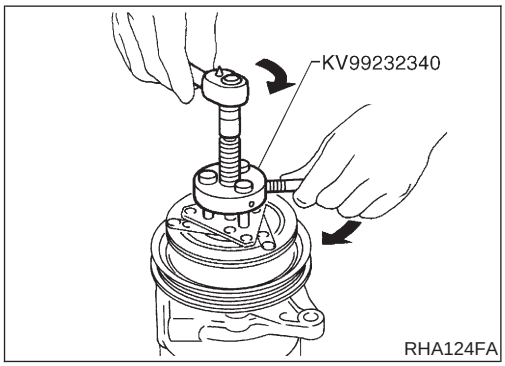

RHA124FA

- Remove the snap ring using external snap ring pliers.

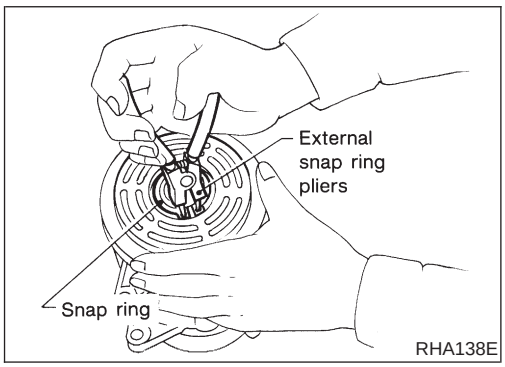

RHA138E

- Pulley removal
  Position the center pulley puller on the end of the drive shaft, and remove the pulley assembly using any commercially available pulley puller.
  To prevent the pulley groove from being deformed, the puller claws should be positioned onto the edge of the pulley assembly.

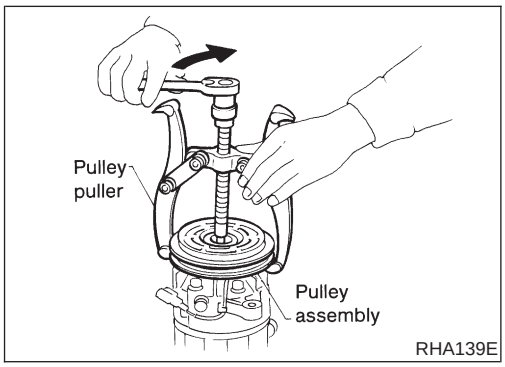

RHA139E

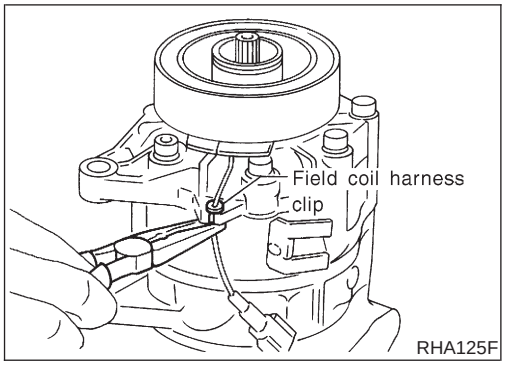

- Remove the field coil harness clip using a pair of pliers.

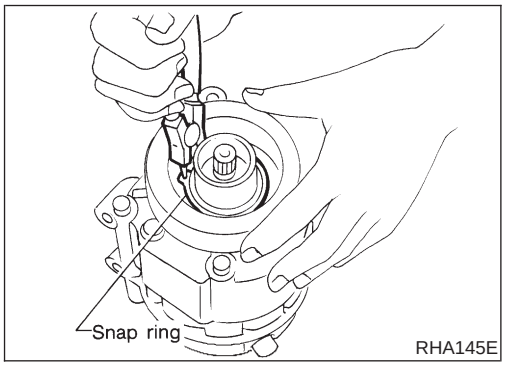

- Remove the snap ring using external snap ring pliers.

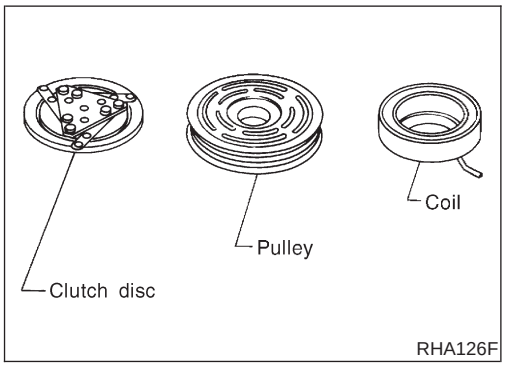

INSPECTION

NFHA0233

Clutch Disc

NFHA0233S01

If the contact surface shows signs of damage due to excessive heat, replace clutch disc and pulley.

Pulley

NFHA0233S02

Check the appearance of the pulley assembly. If the contact surface of pulley shows signs of excessive grooving, replace clutch disc and pulley. The contact surfaces of the pulley assembly should be cleaned with a suitable solvent before reinstallation.

Coil

NFHA0233S03

Check coil for loose connection or cracked insulation.

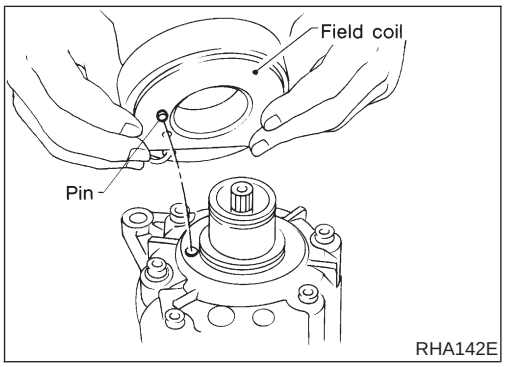

INSTALLATION

NFHA0234

- Install the field coil.
  Be sure to align the coil's pin with the hole in the compressor's front head.
- Install the field coil harness clip using a screwdriver.

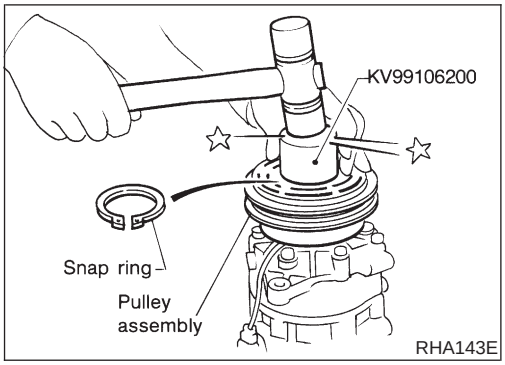

- Install the pulley assembly using the installer and a hand press, and then install the snap ring using snap ring pliers.

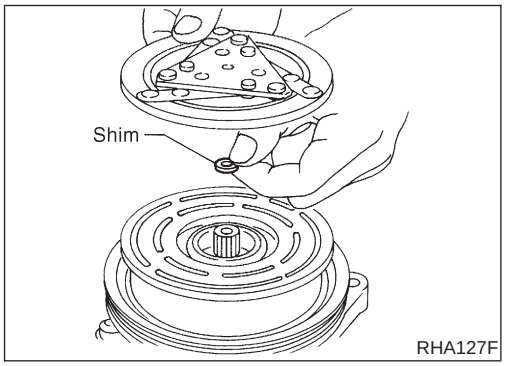

- Install the clutch disc on the drive shaft, together with the original shim(s). Press the clutch disc down by hand.

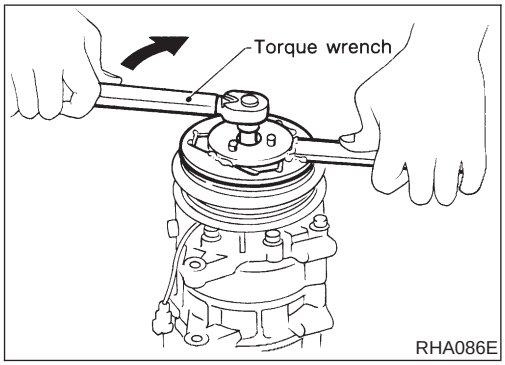

- Using the holder to prevent clutch disc rotation, tighten the bolt to 14 N·m (1.4 kg-m, 10 ft-lb) torque.
  After tightening the bolt, check that the pulley rotates smoothly.

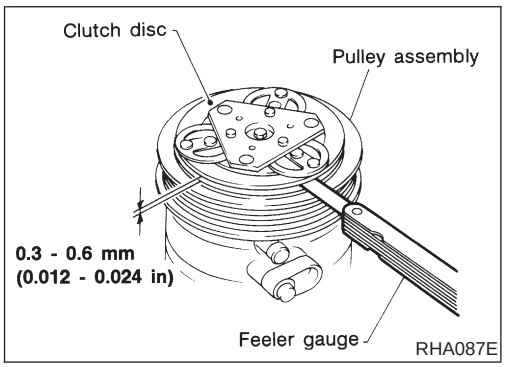

- Check clearance around the entire periphery of clutch disc.
  Disc-to-pulley clearance:
  0.3 - 0.6 mm (0.012 - 0.024 in)
  If the specified clearance is not obtained, replace adjusting spacer and readjust.

Break-in Operation

NFHA0234S01

When replacing compressor clutch assembly, always carry out the break-in operation. This is done by engaging and disengaging the clutch about thirty times. Break-in operation raises the level of transmitted torque.

Heater Unit (Heater Core)

REMOVAL

NFHA0249

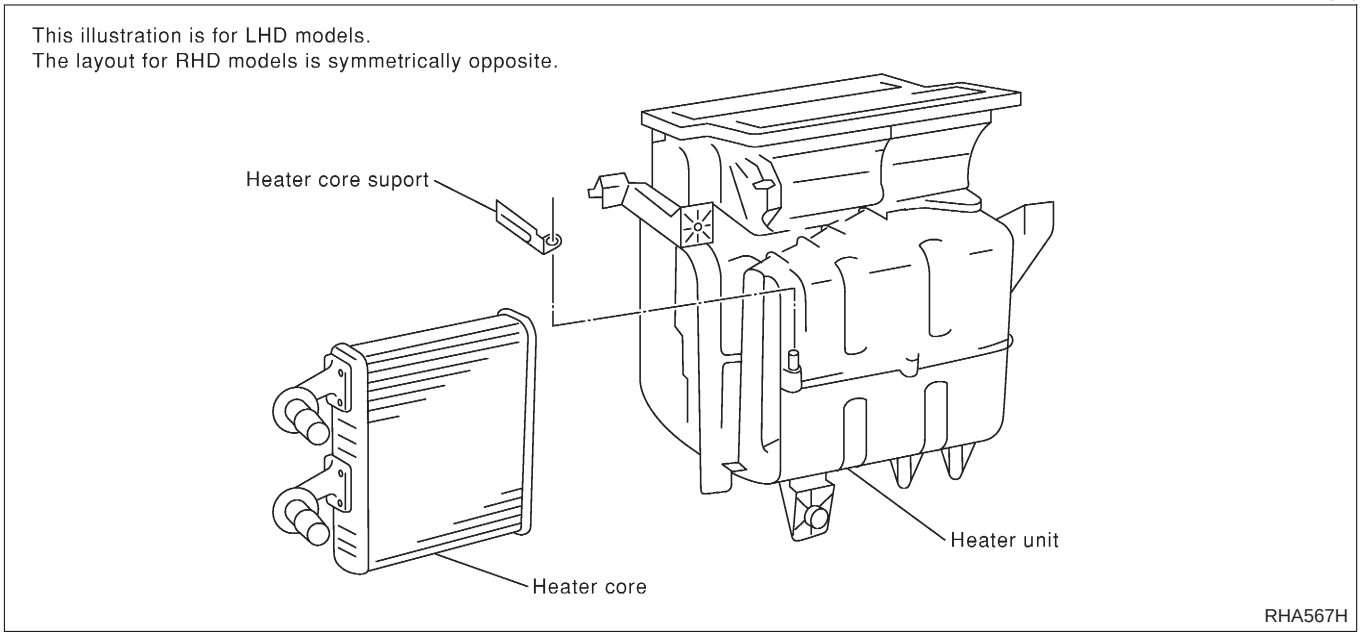

1. Drain the cooling system. Refer to ***MA-16***, “Changing Engine Coolant”.
2. Discharge the A/C system. Refer to HA-108.
3. Disconnect the two heater hoses from inside the engine compartment.
4. Remove the Blower and cooling unit. Refer to HA-118.
5. Remove the steering member assembly. Refer to ***BT-20***, “Removal and Installation”.
6. Remove the heater unit.
7. Remove the heater core.

INSTALLATION

NFHA0250

Installation is basically the reverse order of removal.

When filling radiator with coolant, refer to *MA-16*, “Changing Engine Coolant”.

Recharge the A/C system. Refer to HA-108.

Blower and Cooling Unit (A/C Evaporator)

REMOVAL

NFHA0251

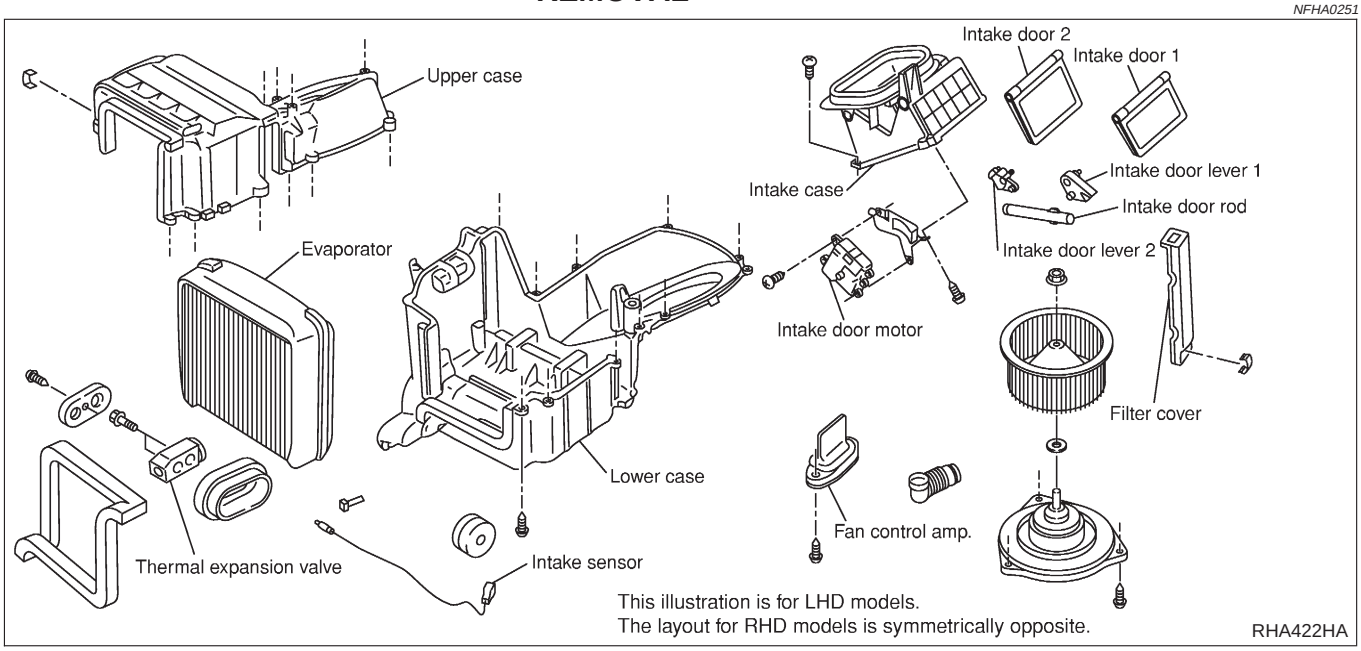

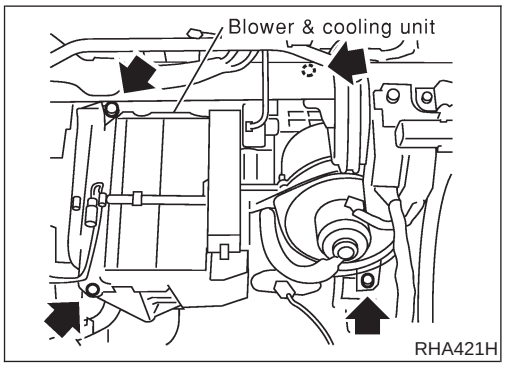

1. Discharge the A/C system. Refer to HA-108.
2. Disconnect the two refrigerant lines from the engine compartment.
   Cap the A/C lines to prevent moisture from entering the system.
3. Remove the glove box and mating trim. Refer to ***BT-20***, “Removal and Installation - Instrument Panel Assembly”.
4. Disconnect the thermal amp. connector.
5. Disconnect the intake sensor connector.
6. Disconnect the fan control amp. and blower motor connector.
7. Remove the blower and cooling unit.
8. Separate the blower and cooling unit case, and remove the evaporator.
9. Remove the three bolts and then remove the motor from the blower case.

INSTALLATION

NFHA0252

Installation is basically the reverse order of removal.
Recharge the A/C system. Refer to HA-108.

Refrigerant Lines

REMOVAL AND INSTALLATION

=NFHA0235

- Refer to page HA-4 regarding “Precautions for Refrigerant Connection”.

LHD models

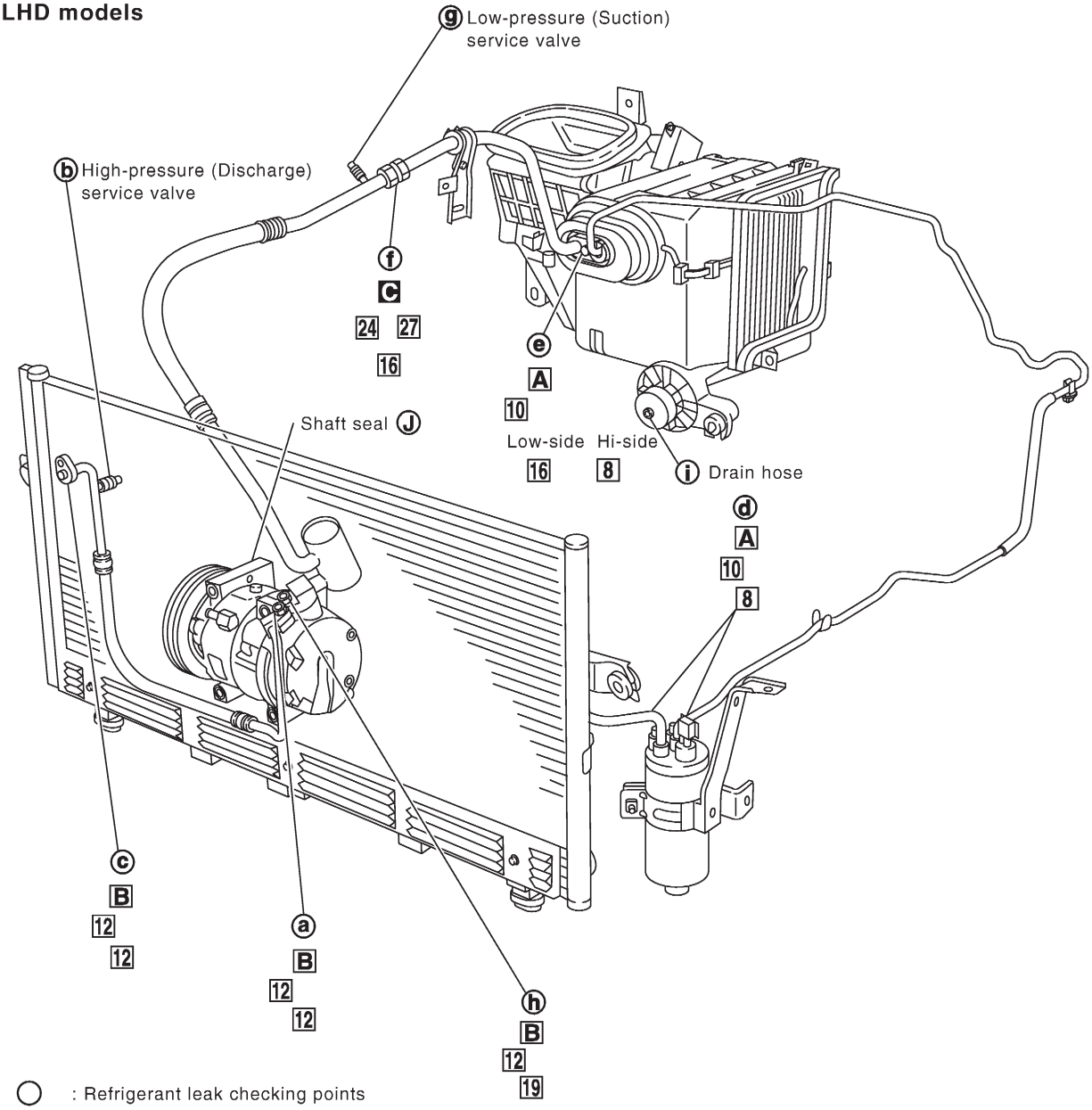

○ : Refrigerant leak checking points
□ : (Tightening torque)
□□ : (Wrench size)
□ : (O-ring size)
: N•m (kg-m, in-lb)
: N•m (kg-m, ft-lb)
A : 2.9 - 5.9 (0.29 - 0.61, 26 - 52)
B : 7.8 - 19.6 (0.78 - 2.00, 68 - 173)
C : 15 - 24 (1.5 - 2.4, 11 - 18)

RHA423HB

RHD models

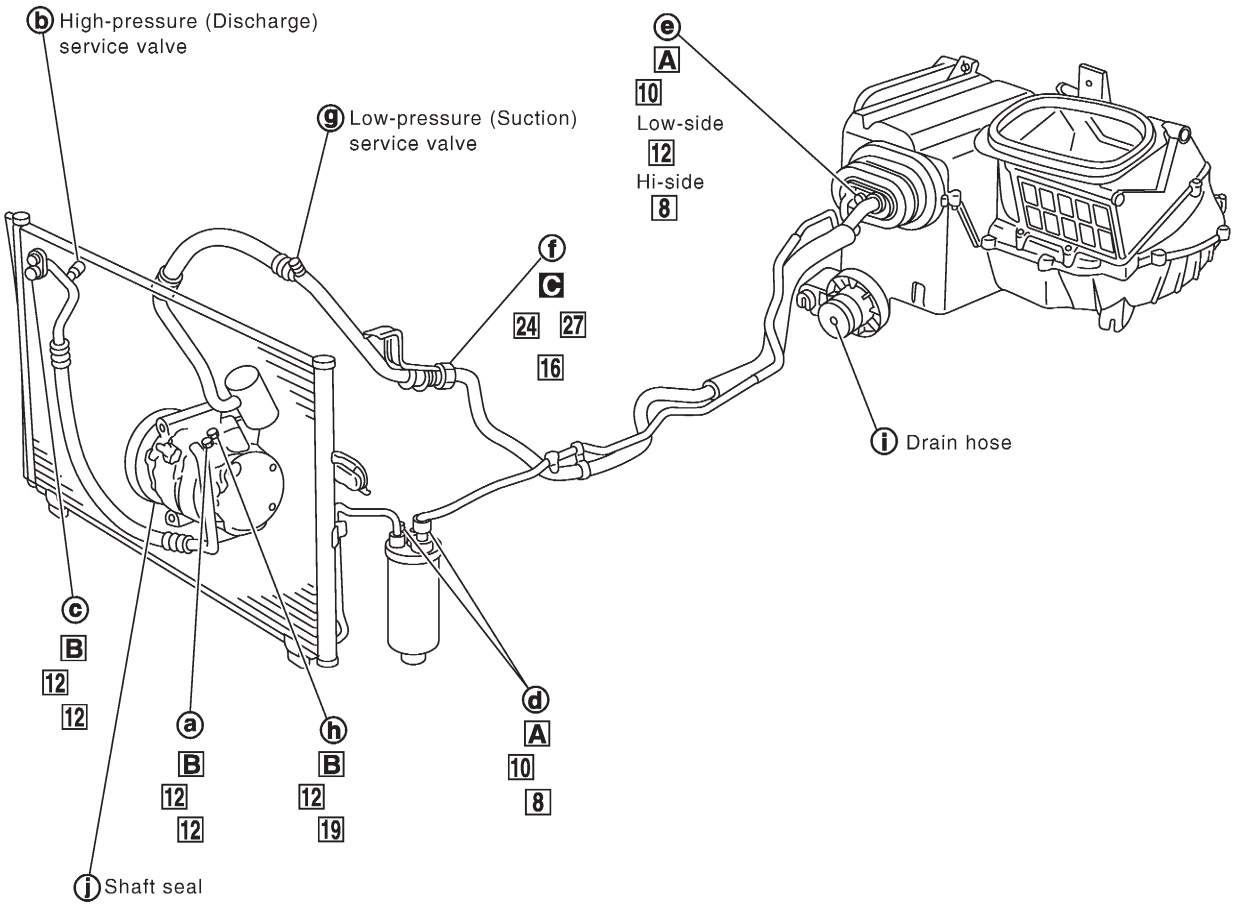

○ : Refrigerant leak checking points
□ : (Tightening torque)
□ □ : (Wrench size)
□ : (O-ring size)
: N•m (kg-m, in-lb)
A : **2.9 - 5.9 (0.29 - 0.61, 26 - 52)**
B : **7.8 - 19.6 (0.78 - 2.00, 68 - 173)**
: N•m (kg-m, ft-lb)
C : **15 - 24 (1.5 - 2.4, 11 - 18)**

RHA900H

- Refer to page HA-4 regarding "Precautions for Refrigerant Connection".

CHECKING REFRIGERANT LEAKS

NFHA0236

Preliminary Check

=NFHA0236S01

Perform a visual inspection of all refrigeration parts, fittings, hoses, and components for signs of A/C lubricant leakage, damage and corrosion. Take note of the areas with A/C lubricant leakage to allow extra time in these areas with electronic leak detector.

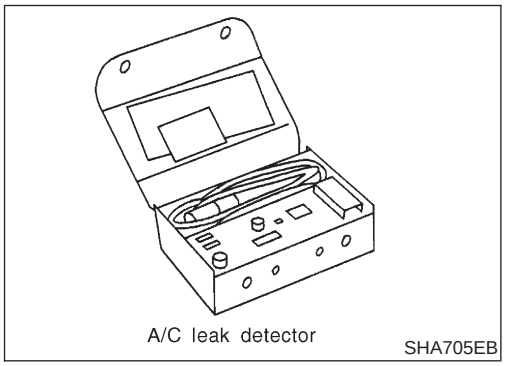

Precautions for Handling Leak Detector

NFHA0236S02

When performing a refrigerant leak check, use an A/C leak detector or equivalent. Ensure that the instrument is calibrated and set properly per the operating instructions.

The leak detector is a delicate device. In order to use the leak detector properly, read the operating instructions and perform any specified maintenance.

Other gases in the work area or substances on the A/C components, for example, anti-freeze, windshield washer fluid, solvents and lubricants, may falsely trigger the leak detector. Make sure the surfaces to be checked are clean. Clean with a dry cloth or blow off with shop air. Do not allow the sensor tip of the detector to contact with any substance. This can also cause false readings and may damage the detector.

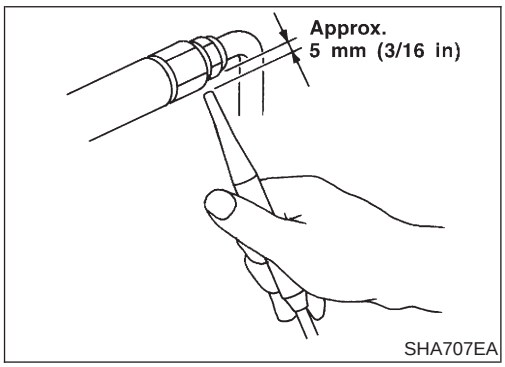

1. Position probe approximately 5 mm (3/16 in) away from point to be checked.

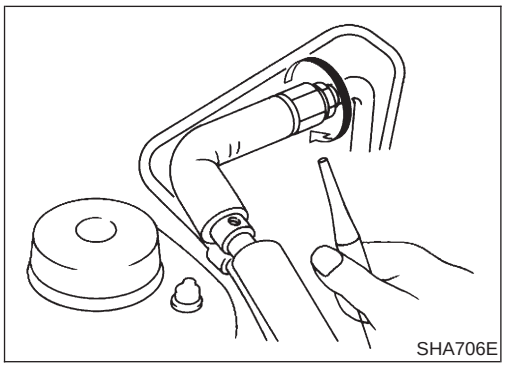

2. When testing, circle each fitting completely with probe.

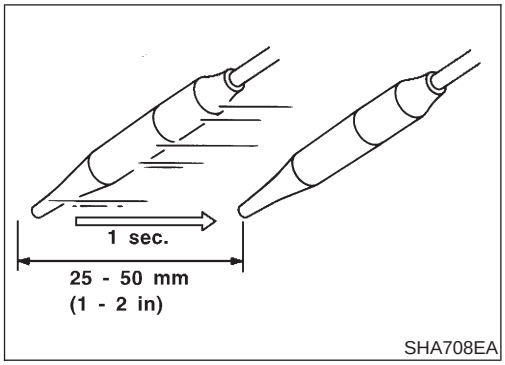

3. Move probe along component approximately 25 to 50 mm (1 to 2 in)/sec.

Checking Procedure

NFHA0236S03

To prevent inaccurate or false readings, make sure there is no refrigerant vapor, shop chemicals, or cigarette smoke in the vicinity of the vehicle. Perform the leak test in calm area (low air/wind movement) so that the leaking refrigerant is not dispersed.

1. Turn engine off.
2. Connect a suitable A/C manifold gauge set to the A/C service ports.
3. Check if the A/C refrigerant pressure is at least 345 kPa (3.45 bar, 3.52 kg/cm^2, 50 psi) above 16°C (61°F). If less than specification, recover/evacuate and recharge the system with the specified amount of refrigerant.

NOTE:
At temperatures below 16°C (61°F), leaks may not be detected since the system may not reach 345 kPa (3.45 bar, 3.52 kg/cm^2, 50 psi).

4. Conduct the leak test from the high side (compressor discharge **a** to evaporator inlet **e**) to the low side (evaporator discharge **e** to shaft seal **j**). Refer to HA-119. Perform a leak check for the following areas carefully. Clean the component to be checked and move the leak detector probe completely around the connection/component.

- **Compressor**
  Check the fitting of high and low pressure hoses, relief valve and shaft seal.
- **Liquid tank**
  Check the refrigerant pressure sensor, tube fitting, weld seams and the fusible plug mount.
- **Service valves**
  Check all around the service valves. Ensure service valve caps are secured on the service valves (to prevent leaks).

NOTE:
After removing A/C manifold gauge set from service valves, wipe any residue from valves to prevent any false readings by leak detector.

- **Cooling unit (Evaporator)**
  With engine OFF, turn blower fan on "High" for at least 15 seconds to dissipate any refrigerant trace in the cooling unit. Wait a minimum of 10 minutes accumulation time (refer to the manufacturer's recommended procedure for actual wait time) before inserting the leak detector probe into the drain hose. Keep the probe inserted for at least ten seconds. Use caution not to contaminate the ptobe tip with water or dirt that may be in the drain hose.

5. If a leak detector detects a leak, verify at least once by blowing compressed air into area of suspected leak, then repeat check as outlined above.
6. Do not stop when one leak is found. Continue to check for additional leaks at all system components.
   If no leaks are found, perform steps 7 - 10.
7. Start engine.
8. Set the heater A/C control as follows:
1) A/C or AUTO switch ON.
2) Face mode
3) Recirculation switch ON
4) Max cold temperature
5) Fan speed high
9. Run engine at 1,500 rpm for at least 2 minutes.
10. Turn engine off and perform leak check again following steps 4 through 6 above.

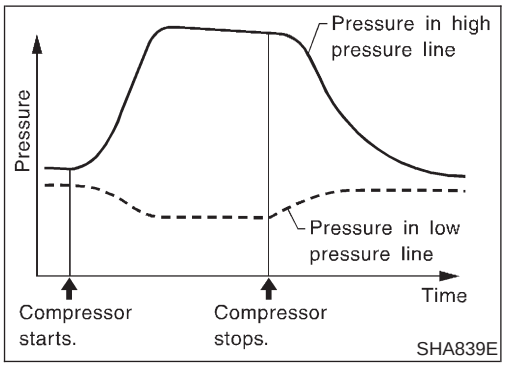

Refrigerant leaks should be checked immediately after stopping the engine. Begin with the leak detector at the compressor. The pressure on the high pressure side will gradually drop after refrigerant circulation stops and pressure on the low pressure side will gradually rise, as shown in the graph. Some leaks are more easily detected when pressure is high.

11. Discharge A/C system using approved refrigerant recovery equipment. Repair the leaking fitting or component as necessary.
12. Evacuate and recharge A/C system and perform the leak test to confirm no refrigerant leaks.
13. Conduct A/C performance test to ensure system works properly.

Belt

TENSION ADJUSTMENT

NFHA0237

- **Refer to *MA-15*, "Checking Drive Belt".**

Idle Air Control Valve (IACV) — Auxiliary Air Control (AAC) Valve

INSPECTION

NFHA0238

- **Refer to *EC-339*, and HA-18, "Description".**

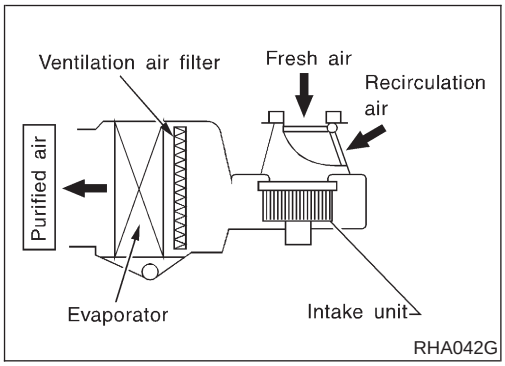

Ventilation Air Filter

FUNCTION

NFHA0266

Air inside passenger compartment is kept clean at either recirculation or fresh mode by installing ventilation air filter into cooling unit.

NOTE:
To replace ventilation air filter, refer to "PERIODIC MAINTENANCE", *MA-7* .
Caution label is fixed inside the glove box.

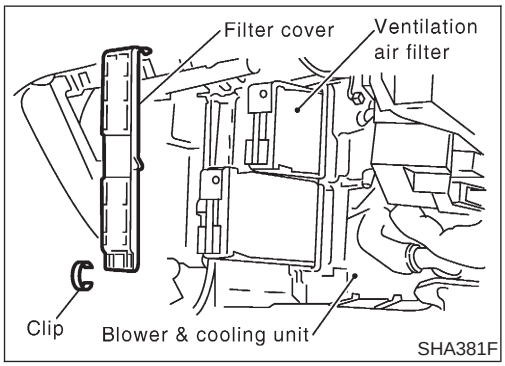

REPLACEMENT PROCEDURE

NFHA0267

1. Remove glove box.
2. Remove instrument lower panel from instrument panel.
3. Remove filter cover fixed clip.
4. Slide the filter cover to the upper side and then remove it.
5. Take out the lower side ventilation air filter from cooling unit.
6. Then slide upper side filter to the bottom position and take off the ventilation air filter from the cooling unit.
7. Replace with new one and reinstall on cooling unit.
8. Reinstall filter cover, clip, instrument lower panel and glove box.

Auto

COMPRESSOR

NFHA0241

Model		CALSONIC make V-6
Type		V-6 variable displacement
Displacement cm^3 (cu in)/rev.	Max.	184 (11.228)
	Min.	14.5 (0.885)
Cylinder bore x stroke mm (in)		37 (1.46) x [2.3 - 28.6 (0.091 - 1.126)]
Direction of rotation		Clockwise (viewed from drive end)
Drive belt		Poly V

LUBRICANT

NFHA0242

Model		CALSONIC make V-6
Name		Nissan A/C System Oil Type S
Part number*		KLH00-PAGS0
Capacity mℓ (Imp fl oz)	Total in system	200 (7.0)
	Compressor (Service part) charging amount	200 (7.0)

*: Always check with the Parts Department for the latest parts information.

REFRIGERANT

NFHA0243

Type	HFC-134a (R-134a)
Capacity kg (lb)	0.60 - 0.70 (1.32 - 1.54)

ENGINE IDLING SPEED (WHEN A/C IS ON)

NFHA0244

- **Refer to *EC*, “Description”.**

BELT TENSION

NFHA0245

- **Refer to *MA-15*, “Checking Drive Belts”.**

Supplemental Restraint System (SRS) "AIR BAG" and "SEAT BELT PRE-TENSIONER"

NFHA0060

The Supplemental Restraint System such as "AIR BAG" and "SEAT BELT PRE-TENSIONER" used along with a seat belt, helps to reduce the risk or severity of injury to the driver and front passenger for certain types of collision. The SRS system composition which is available to NISSAN MODEL A33 is as follows (The composition varies according to optional equipment.):

- For a frontal collision
  The Supplemental Restraint System consists of driver air bag module (located in the center of the steering wheel), front passenger air bag module (located on the instrument panel on passenger side), seat belt pre-tensioners, a diagnosis sensor unit, warning lamp, wiring harness and spiral cable.
- For a side collision
  The Supplemental Restraint System consists of front side air bag module (located in the outer side of front seat), satellite sensor, diagnosis sensor unit (one of components of air bags for a frontal collision), wiring harness, warning lamp (one of components of air bags for a frontal collision).

Information necessary to service the system safely is included in the **RS section** of this Service Manual.

WARNING:

- **To avoid rendering the SRS inoperative, which could increase the risk of personal injury or death in the event of a collision which would result in air bag inflation, all maintenance should be performed by an authorized NISSAN dealer.**
- **Improper maintenance, including incorrect removal and installation of the SRS, can lead to personal injury caused by unintentional activation of the system. For removal of Spiral Cable and Air Bag Module, see the RS section.**
- **Do not use electrical test equipment on any circuit related to the SRS unless instructed to in this Service Manual. Spiral cable and wiring harnesses covered with yellow insulation or tape either just before the harness connectors or for the complete harness are related to the SRS.**

Precautions for Working with HFC-134a (R-134a)

NFHA0061

WARNING:

- **CFC-12 (R-12) refrigerant and HFC-134a (R-134a) refrigerant are not compatible. These refrigerants must never be mixed, even in the smallest amounts. If the refrigerants are mixed and compressor failure is likely to occur.**
- **Use only specified lubricant for the HFC-134a (R-134a) A/C system and HFC-134a (R-134a) components. If lubricant other than that specified is used, compressor failure is likely to occur.**
- **The specified HFC-134a (R-134a) lubricant rapidly absorbs moisture from the atmosphere. The following handling precautions must be observed:**

a) When removing refrigerant components from a vehicle, immediately cap (seal) the component to minimize the entry of moisture from the atmosphere.

b) When installing refrigerant components to a vehicle, do not remove the caps (unseal) until just before connecting the components. Connect all refrigerant loop components as quickly as possible to minimize the entry of moisture into system.

c) Only use the specified lubricant from a sealed container. Immediately reseal containers of lubricant. Without proper sealing, lubricant will become moisture saturated and should not be used.

d) Avoid breathing A/C refrigerant and lubricant vapor or mist. Exposure may irritate eyes, nose and throat. Use only approved recovery/recycling equipment to discharge HFC-134a (R-134a) refrigerant. If accidental system discharge occurs, ventilate work area before resuming service. Additional health and safety information may be obtained from refrigerant and lubricant manufacturers.

e) Do not allow lubricant (Nissan A/C System Oil Type S) to come in contact with styrofoam parts. Damage may result.

General Refrigerant Precautions

=NFHA0062

WARNING:

- **Do not release refrigerant into the air. Use approved recovery/recycling equipment to capture the refrigerant every time an air conditioning system is discharged.**
- **Always wear eye and hand protection (goggles and gloves) when working with any refrigerant or air conditioning system.**
- **Do not store or heat refrigerant containers above 52°C (125°F).**
- **Do not heat a refrigerant container with an open flame; if container warming is required, place the bottom of the container in a warm pail of water.**
- **Do not intentionally drop, puncture, or incinerate refrigerant containers.**
- **Keep refrigerant away from open flames: poisonous gas will be produced if refrigerant burns.**
- **Refrigerant will displace oxygen, therefore be certain to work in well ventilated areas to prevent suffocation.**
- **Do not pressure test or leak test HFC-134a (R-134a) service equipment and/or vehicle air conditioning systems with compressed air during repair. Some mixtures of air and R-134a have been shown to be combustible at elevated pressures. These mixtures, if ignited, may cause injury or property damage. Additional health and safety information may be obtained from refrigerant manufacturers.**

Precautions for Refrigerant Connection

NFHA0063

A new type refrigerant connection has been introduced to all refrigerant lines except the following portion.

- Expansion valve to cooling unit

FEATURES OF NEW TYPE REFRIGERANT CONNECTION

NFHA0063S01

- The O-ring has been relocated. It has also been provided with a groove for proper installation. This eliminates the chance of the O-ring being caught in, or damaged by, the mating part. The sealing direction of the O-ring is now set vertically in relation to the contacting surface of the mating part to improve sealing characteristics.
- The reaction force of the O-ring will not occur in the direction that causes the joint to pull out, thereby facilitating piping connections.

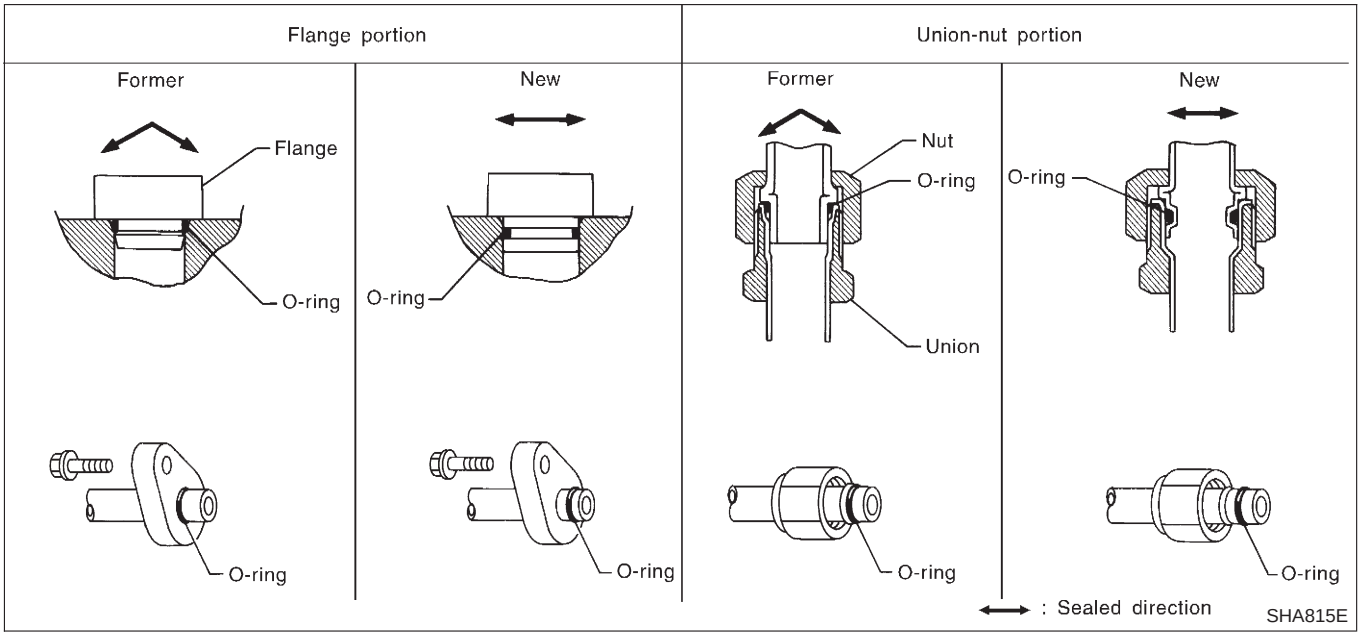

O-RING AND REFRIGERANT CONNECTION

NFHA0063S02

This illustration is for LHD models.
The layout for RHD models is symmetrically opposite.

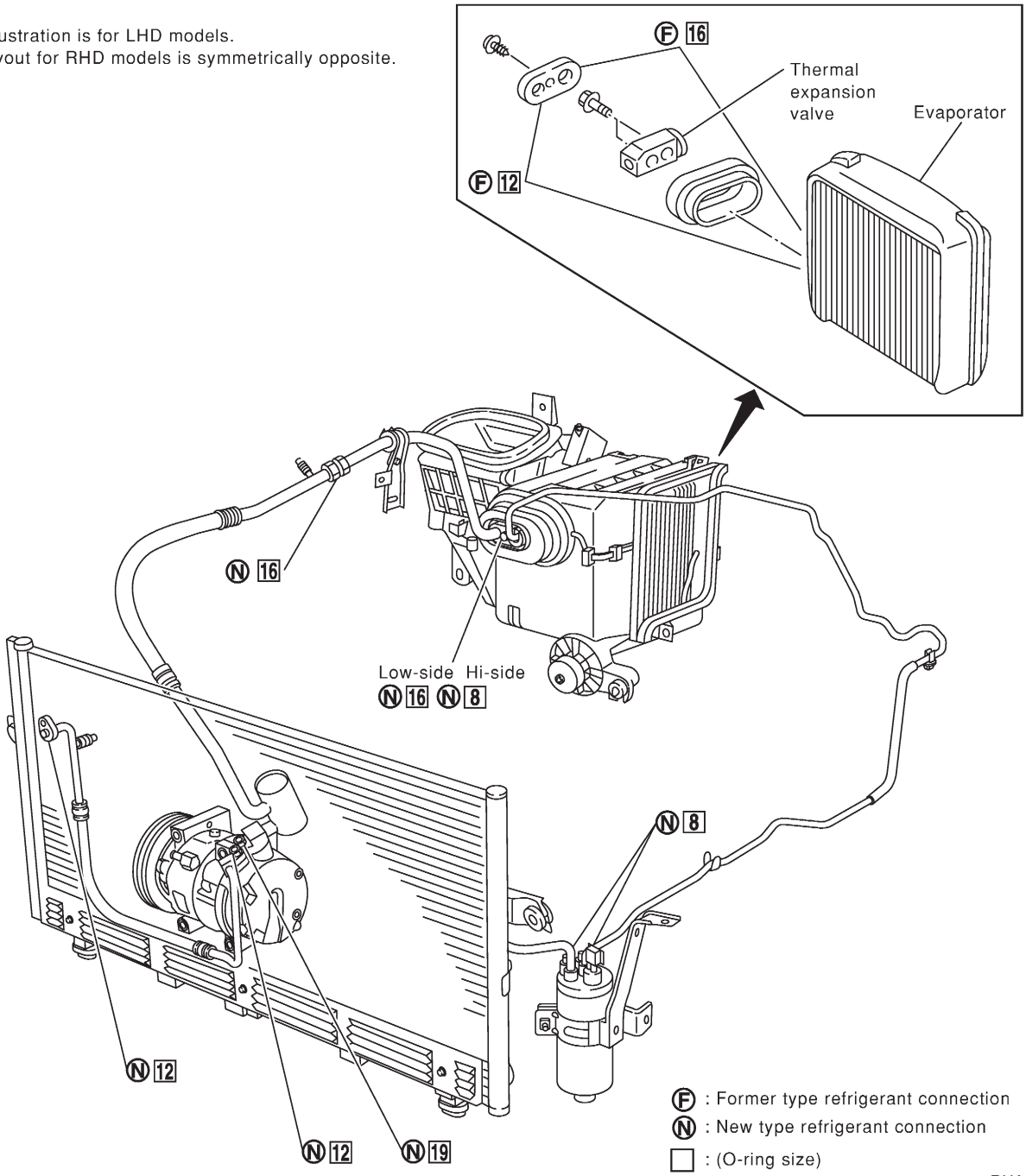

RHA452HA

CAUTION:

The new and former refrigerant connections use different O-ring configurations. Do not confuse O-rings since they are not interchangeable. If a wrong O-ring is installed, refrigerant will leak at, or around, the connection.

O-Ring Part Numbers and Specifications

NFHA0063S0201

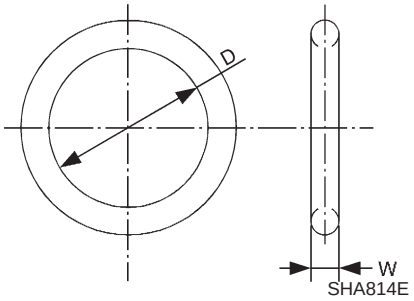

Connection type	O-ring size	Part number	D mm (in)	W mm (in)
New	8	92471 N8210	6.8 (0.268)	1.85 (0.0728)
Former		92470 N8200	6.07 (0.2390)	1.78 (0.0701)
New	12	92472 N8210	10.9 (0.429)	2.43 (0.0957)
Former		92475 71L00	11.0 (0.433)	2.40 (0.0945)
New	16	92473 N8210	13.6 (0.535)	2.43 (0.0957)
Former		92475 72L00	14.3 (0.563)	2.30 (0.0906)
New	19	92474 N8210	16.5 (0.650)	2.43 (0.0957)
Former		92477 N8200	17.12 (0.6740)	1.78 (0.0701)

WARNING:

Make sure all refrigerant is discharged into the recycling equipment and the pressure in the system is less than atmospheric pressure. Then gradually loosen the discharge side hose fitting and remove it.

CAUTION:

When replacing or cleaning refrigerant cycle components, observe the following.

- **When the compressor is removed, store it in the same position as it is when mounted on the car. Failure to do so will cause lubricant to enter the low pressure chamber.**
- **When connecting tubes, always use a torque wrench and a back-up wrench.**
- **After disconnecting tubes, immediately plug all openings to prevent entry of dirt and moisture.**
- **When installing an air conditioner in the vehicle, connect the pipes as the final stage of the operation. Do not remove the seal caps of pipes and other components until just before required for connection.**
- **Allow components stored in cool areas to warm to working area temperature before removing seal caps. This prevents condensation from forming inside A/C components.**
- **Thoroughly remove moisture from the refrigeration system before charging the refrigerant.**
- **Always replace used O-rings.**
- **When connecting tube, apply lubricant to circle of the O-rings shown in illustration. Be careful not to apply lubricant to threaded portion.**
  Lubricant name: Nissan A/C System Oil Type S
  Part number: KLH00-PAGS0
- **O-ring must be closely attached to dented portion of tube.**
- **When replacing the O-ring, be careful not to damage O-ring and tube.**
- **Connect tube until you hear it click, then tighten the nut or bolt by hand until snug. Make sure that the O-ring is installed to tube correctly.**
- **After connecting line, conduct leak test and make sure that there is no leakage from connections. When the gas leaking point is found, disconnect that line and replace the O-ring. Then tighten connections of seal seat to the specified torque.**

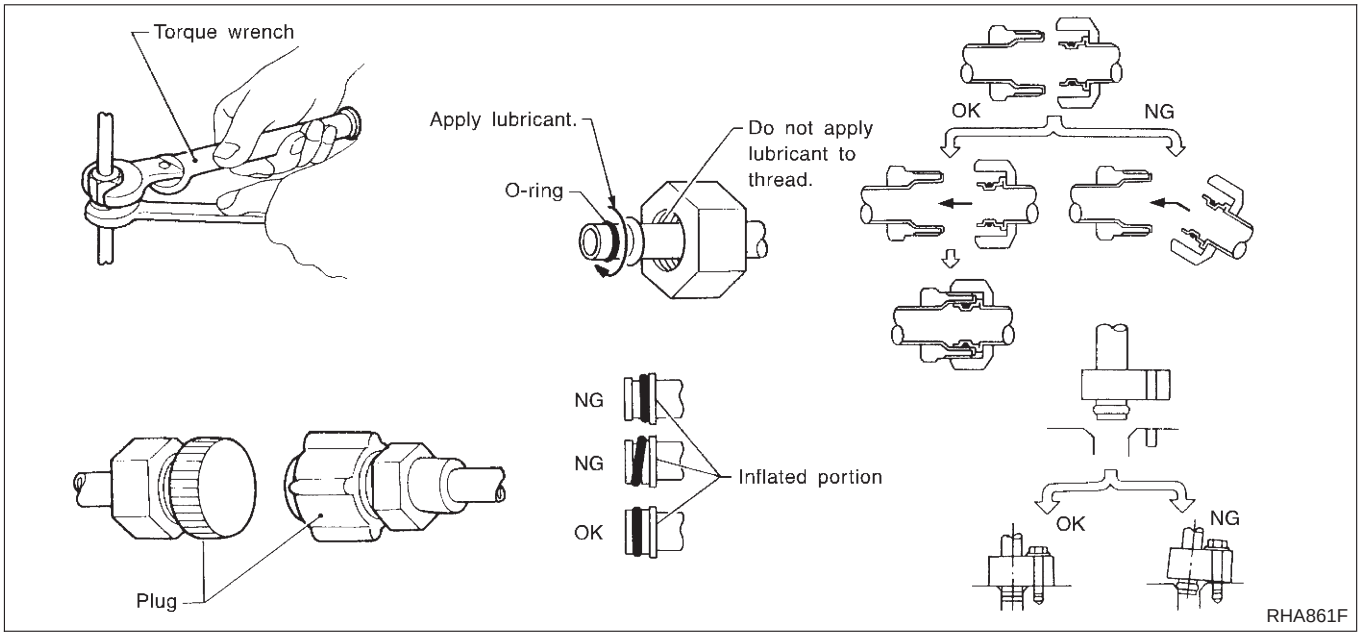

Precautions for Servicing Compressor

NFHA0064

- **Plug all openings to prevent moisture and foreign matter from entering.**
- **When the compressor is removed, store it in the same position as it is when mounted on the car.**
- **When replacing or repairing compressor, follow "Maintenance of Lubricant Quantity in Compressor" exactly. Refer to HA-195.**
- **Keep friction surfaces between clutch and pulley clean. If the surface is contaminated, with lubricant, wipe it off by using a clean waste cloth moistened with thinner.**
- **After compressor service operation, turn the compressor shaft by hand more than five turns in both directions. This will equally distribute lubricant inside the compressor. After the compressor is installed, let the engine idle and operate the compressor for one hour.**
- **After replacing the compressor magnet clutch, apply voltage to the new one and check for normal operation.**

Precautions for Service Equipment

NFHA0065

RECOVERY/RECYCLING EQUIPMENT

NFHA0065S01

Follow the manufacturer's instructions for machine operation and machine maintenance. Never introduce any refrigerant other than that specified into the machine.

ELECTRONIC LEAK DETECTOR

NFHA0065S02

Follow the manufacture's instructions for tester operation and tester maintenance.

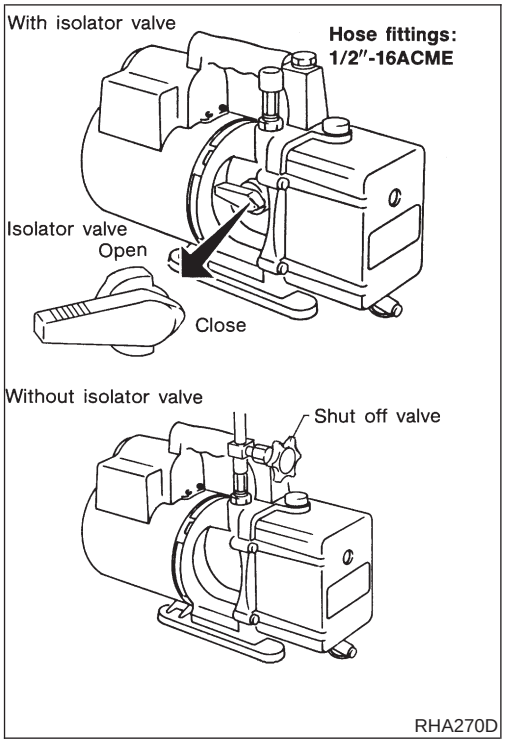

VACUUM PUMP

NFHA0065S03

The lubricant contained inside the vacuum pump is not compatible with the specified lubricant for HFC-134a (R-134a) A/C systems. The vent side of the vacuum pump is exposed to atmospheric pressure. So the vacuum pump lubricant may migrate out of the pump into the service hose. This is possible when the pump is switched off after evacuation (vacuuming) and hose is connected to it.

To prevent this migration, use a manual valve situated near the hose-to-pump connection, as follows.

- Usually vacuum pumps have a manual isolator valve as part of the pump. Close this valve to isolate the service hose from the pump.
- For pumps without an isolator, use a hose equipped with a manual shut-off valve near the pump end. Close the valve to isolate the hose from the pump.
- If the hose has an automatic shut off valve, disconnect the hose from the pump: as long as the hose is connected, the valve is open and lubricating oil may migrate.

Some one-way valves open when vacuum is applied and close under a no vacuum condition. Such valves may restrict the pump's ability to pull a deep vacuum and are not recommended.

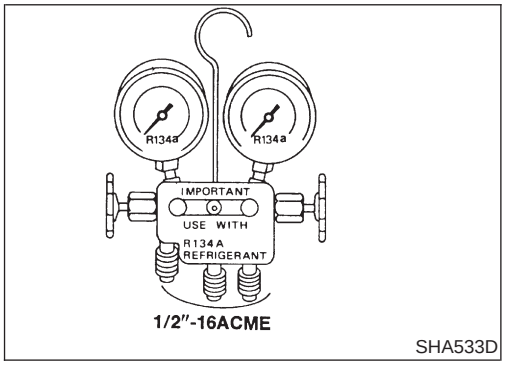

MANIFOLD GAUGE SET

NFHA0065S04

Be certain that the gauge face indicates R-134a or 134a. Make sure the gauge set has 1/2″-16 ACME threaded connections for service hoses. Confirm the set has been used only with refrigerant HFC-134a (R-134a) along with specified lubricant.

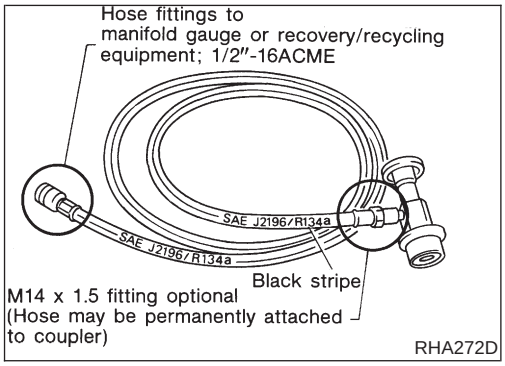

SERVICE HOSES

NFHA0065S05

Be certain that the service hoses display the markings described (colored hose with black stripe). All hoses must include positive shut off devices (either manual or automatic) near the end of the hoses opposite the manifold gauge.

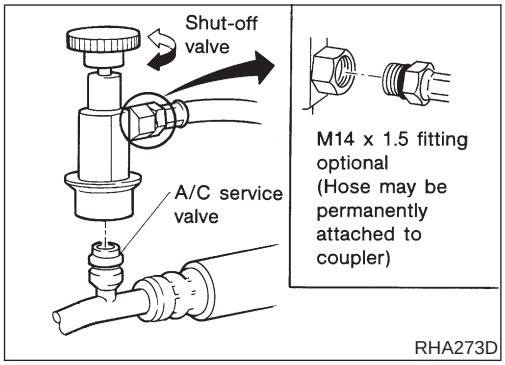

SERVICE COUPLERS

NFHA0065S06

Never attempt to connect HFC-134a (R-134a) service couplers to an CFC-12 (R-12) A/C system. The HFC-134a (R-134a) couplers will not properly connect to the CFC-12 (R-12) system. However, if an improper connection is attempted, discharging and contamination may occur.

Shut-off valve rotation	A/C service valve
Clockwise	Open
Counterclockwise	Close

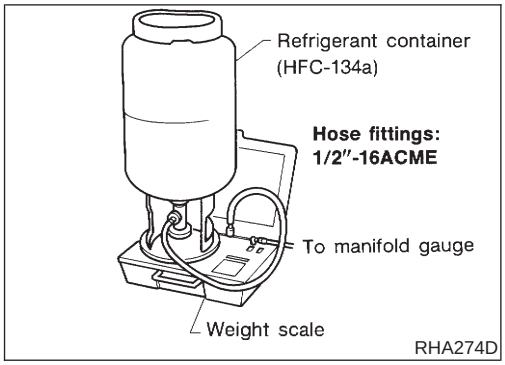

REFRIGERANT WEIGHT SCALE

NFHA0065S07

Verify that no refrigerant other than HFC-134a (R-134a) and specified lubricants have been used with the scale. If the scale controls refrigerant flow electronically, the hose fitting must be 1/2″-16 ACME.

CALIBRATING ACR4 WEIGHT SCALE

NFHA0065S09

Calibrate the scale every three months.
To calibrate the weight scale on the ACR4:

1. Press **Shift/Reset** and **Enter** at the same time.
2. Press **8787**. "**A1**" will be displayed.
3. Remove all weight from the scale.
4. Press **0**, then press **Enter**. "**0.00**" will be displayed and change to "**A2**".
5. Place a known weight (dumbbell or similar weight), between 4.5 and 8.6 kg (10 and 19 lb) on the center of the weight scale.
6. Enter the known weight using four digits. (Example 10 lb = 10.00, 10.5 lb = 10.50)
7. Press **Enter** — the display returns to the vacuum mode.
8. Press **Shift/Reset** and **Enter** at the same time.
9. Press **6** — the known weight on the scale is displayed.
10. Remove the known weight from the scale. "**0.00**" will be displayed.
11. Press **Shift/Reset** to return the ACR4 to the program mode.

CHARGING CYLINDER

NFHA0065S08

Using a charging cylinder is not recommended. Refrigerant may be vented into air from cylinder's top valve when filling the cylinder with refrigerant. Also, the accuracy of the cylinder is generally less than that of an electronic scale or of quality recycle/recharge equipment.

Wiring Diagrams and Trouble Diagnoses

NFHA0066

When you read wiring diagrams, refer to the following:

- ***GI-11***, "HOW TO READ WIRING DIAGRAMS"
- ***EL-9***, "Wiring Diagram — POWER —" for power distribution circuit

When you perform trouble diagnoses, refer to the following:

- ***GI-33***, "HOW TO FOLLOW TROUBLE DIAGNOSES"
- ***GI-22***, "HOW TO PERFORM EFFICIENT DIAGNOSIS FOR AN ELECTRICAL INCIDENT"

Special Service Tools

NFHA0067

Tool number Tool name	Description	
KV99106100 Clutch disc wrench	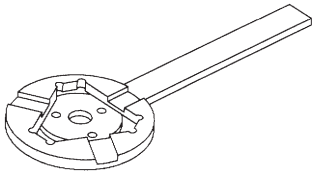 NT232 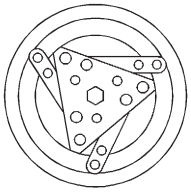 When replacing the magnet clutch in the above compressor, use a clutch disc wrench with the pin side on the clutch disc to remove it. 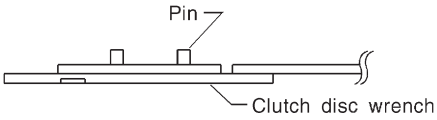 NT378	Removing center bolt
KV99232340 or KV992T0001 Clutch disc puller	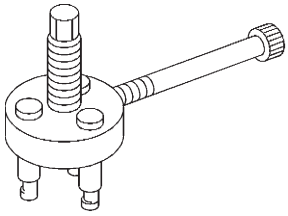 NT376	Removing clutch disc
KV99106200 Pulley installer	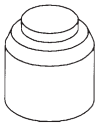 NT235	Installing pulley

HFC-134a (R-134a) Service Tools and Equipment

=NFHA0068

Never mix HFC-134a refrigerant and/or its specified lubricant with CFC-12 (R-12) refrigerant and/or its lubricant.
Separate and non-interchangeable service equipment must be used for handling each type of refrigerant/lubricant.
Refrigerant container fittings, service hose fittings and service equipment fittings (equipment which handles refrigerant and/or lubricant) are different between CFC-12 (R-12) and HFC-134a (R-134a). This is to avoid mixed use of the refrigerants/lubricant.
Adapters that convert one size fitting to another must never be used: refrigerant/lubricant contamination will occur and compressor failure will result.

Tool number Tool name	Description	
HFC-134a (R-134a) refrigerant	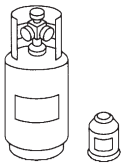 NT196	Container color: Light blue Container marking: HFC-134a (R-134a) Fitting size: Thread size ● Large container 1/2″-16 ACME
KLH00-PAGS0 Nissan A/C System Oil Type S	 NT197	Type: Poly alkylene glycol oil (PAG), type S Application: HFC-134a (R-134a) swash plate (piston) compressors (Nissan only) Lubricity: 40 mℓ (1.4 Imp fl oz)
Recovery/Recycling Recharging equipment (ACR4)	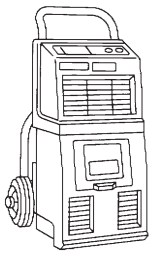 NT195	Function: Refrigerant Recovery and Recycling and Recharging
Electrical leak detector	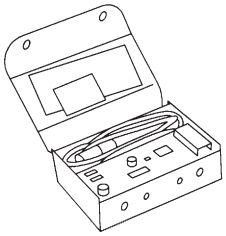 NT198	Power supply: ● DC 12V (Cigarette lighter)
Manifold gauge set (with hoses and couplers)	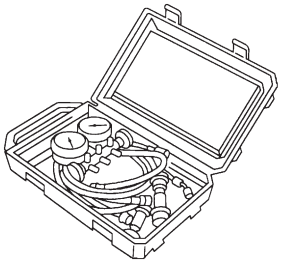 NT199	Identification: ● The gauge face indicates R-134a. Fitting size: Thread size ● 1/2″-16 ACME

Tool number Tool name	Description	
Service hoses ● High side hose ● Low side hose ● Utility hose	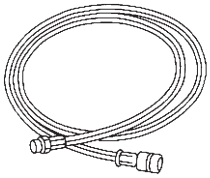 NT201	Hose color: ● Low hose: Blue with black stripe ● High hose: Red with black stripe ● Utility hose: Yellow with black stripe or green with black stripe Hose fitting to gauge: ● 1/2″-16 ACME
Service couplers ● High side coupler ● Low side coupler	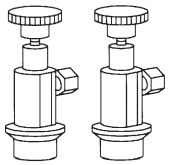 NT202	Hose fitting to service hose: ● M14 x 1.5 fitting is optional or permanently attached.
Refrigerant weight scale	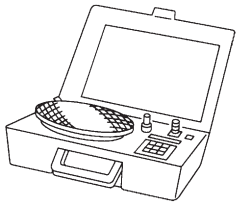 NT200	For measuring of refrigerant Fitting size: Thread size ● 1/2″-16 ACME
Vacuum pump (Including the isolator valve)	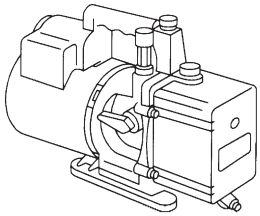 NT203	Capacity: ● Air displacement: 4 CFM ● Micron rating: 20 microns ● Oil capacity: 482 g (17 oz) Fitting size: Thread size ● 1/2″-16 ACME

Refrigeration System

REFRIGERATION CYCLE

NFHA0069

Refrigerant Flow

NFHA0069S01

The refrigerant flows in the standard pattern, that is, through the compressor, the condenser, the liquid tank, through the evaporator, and back to the compressor. The refrigerant evaporation through the evaporator coil is controlled by an externally equalized expansion valve, located inside the evaporator case.

Freeze Protection

NFHA0069S02

Under normal operating conditions, when the A/C is switched on, the compressor runs continuously, and the evaporator pressure, and therefore, temperature is controlled by the V-6 variable displacement compressor to prevent freeze up.

Refrigerant System Protection

NFHA0069S03

Refrigerant Pressure Sensor

NFHA0069S0301

The refrigerant system is protected against excessively high or low pressures by the refrigerant pressure sensor, located on the liquid tank. If the system pressure rises above, or falls below the specifications, the refrigerant pressure sensor detects the pressure inside the refrigerant line and sends the voltage signal to the ECM. ECM makes the A/C relay go OFF and stops the compressor when pressure on the high pressure side detected by refrigerant pressure sensor is over about 2,746 kPa (27.5 bar, 28 kg/cm^2, 398 psi) or below about 137 kPa (1.37 bar, 1.4 kg/cm^2, 20 psi).

Pressure Relief Valve

NFHA0069S0302

The refrigerant system is also protected by a pressure relief valve, located in the rear head of the compressor. When the pressure of refrigerant in the system increases to an abnormal level [more than 3,727 kPa (37.3 bar, 38 kg/cm^2, 540 psi)], the release port on the pressure relief valve automatically opens and releases refrigerant into the atmosphere.

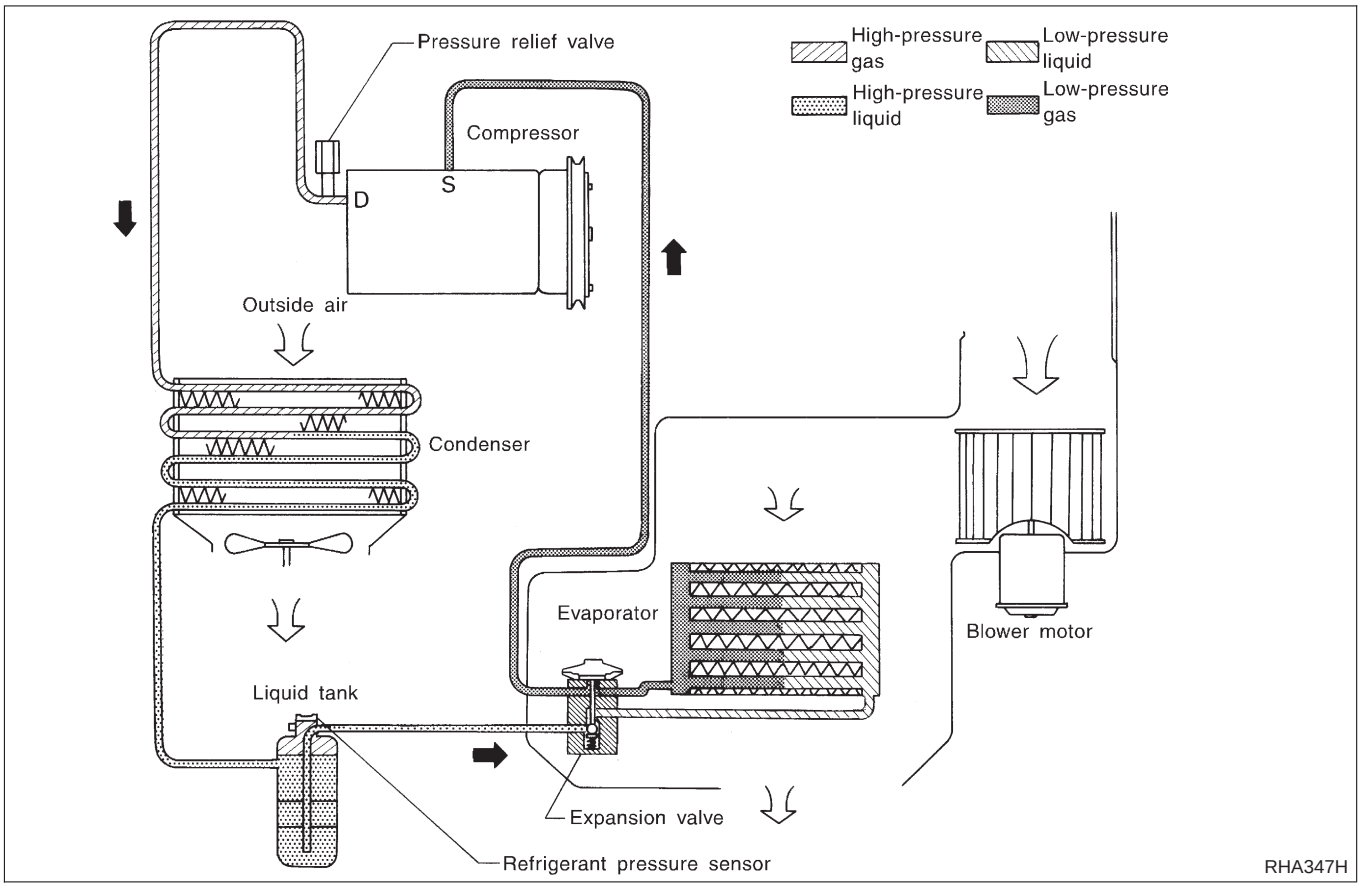

V-6 Variable Displacement Compressor

GENERAL INFORMATION

=NFHA0070

1. The V-6 variable compressor differs from previous units. The vent temperatures of the V-6 variable compress do not drop too far below 5°C (41°F) when:

- evaporator intake air temperature is less than 20°C (68°F)
- engine is running at speeds less than 1,500 rpm.

This is because the V-6 compressor provides a means of “capacity” control.

2. The V-6 variable compressor provides refrigerant control under varying conditions. During cold winters, it may not produce high refrigerant pressure discharge (compared to previous units) when used with air conditioning systems.
3. A “clanking” sound may occasionally be heard during refrigerant charge. The sound indicates that the tilt angle of the swash plate has changed and is not a problem.
4. For air conditioning systems with the V-6 compressor, the clutch remains engaged unless: the system main switch, fan switch or ignition switch is turned OFF. When ambient (outside) temperatures are low or when the amount of refrigerant is insufficient, the clutch is disengaged to protect the compressor.
5. A constant range of suction pressure is maintained when engine speed is greater than a certain value. It normally ranges from 147 to 177 kPa (1.47 to 1.77 bar, 1.5 to 1.8 kg/cm^2, 21 to 26 psi) under varying conditions.
   In previous compressors, however, suction pressure was reduced with increases in engine speed.

DESCRIPTION

=NFHA0132

General

NFHA0132S01

The variable compressor is basically a swash plate type that changes piston stroke in response to the required cooling capacity.
The tilt of the swash plate allows the piston's stroke to change so that refrigerant discharge can be continuously changed from 14.5 to 184 cm^3 (0.885 to 11.228 cu in).

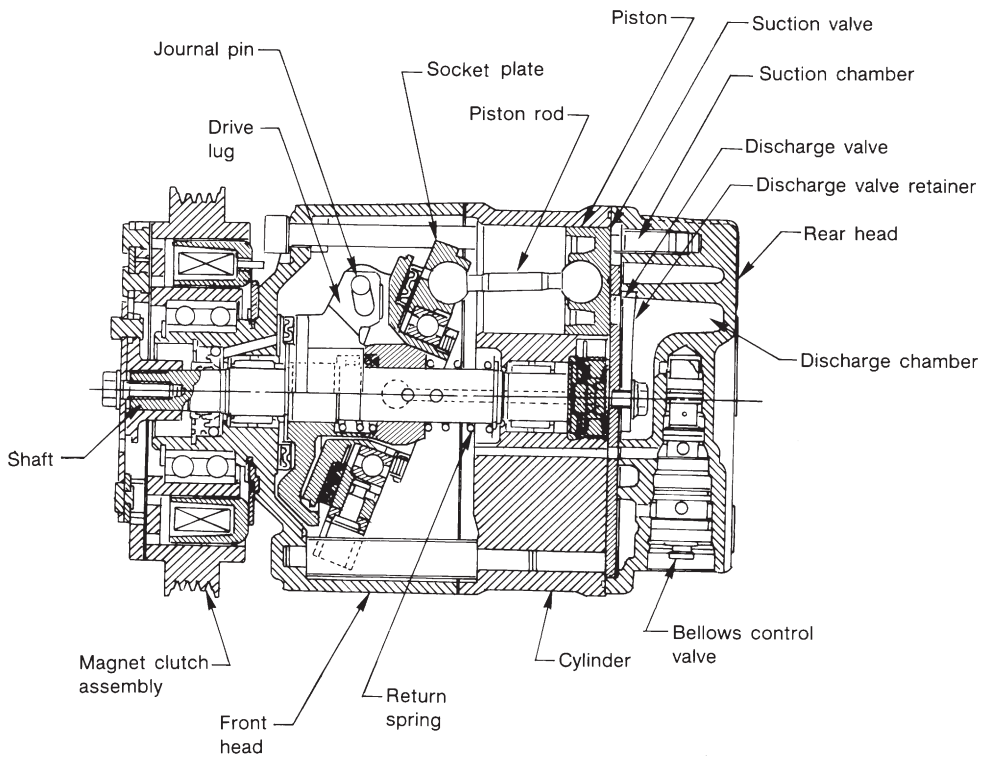

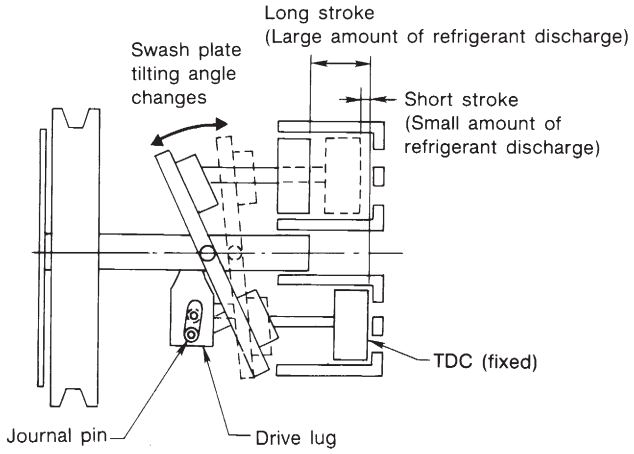

Discharge control	Discharge capacity cm^3 (cu in)/rev.	Piston stroke length mm (in)
Minimum	14.5 (0.885)	2.3 (0.091)
Maximum	184 (11.228)	28.6 (1.126)

RHA037DB

Operation

=NFHA0132S02

1. Operation Control Valve

NFHA0132S0201

Operation control valve is located in the suction port (low-pressure) side, and opens or closes in response to changes in refrigerant suction pressure.
Operation of the valve controls the internal pressure of the crankcase.
The angle of the swash plate is controlled between the crankcase's internal pressure and the piston cylinder pressure.

2. Maximum Cooling

NFHA0132S0202

Refrigerant pressure on the low-pressure side increases with an increase in heat loads.
When this occurs, the control valve's bellows compress to open the low-pressure side valve and close the high-pressure side valve.
This causes the following pressure changes:

- the crankcase's internal pressure to equal the pressure on the low-pressure side;
- the cylinder's internal pressure to be greater than the crankcase's internal pressure.

Under this condition, the swash plate is set to the maximum stroke position.

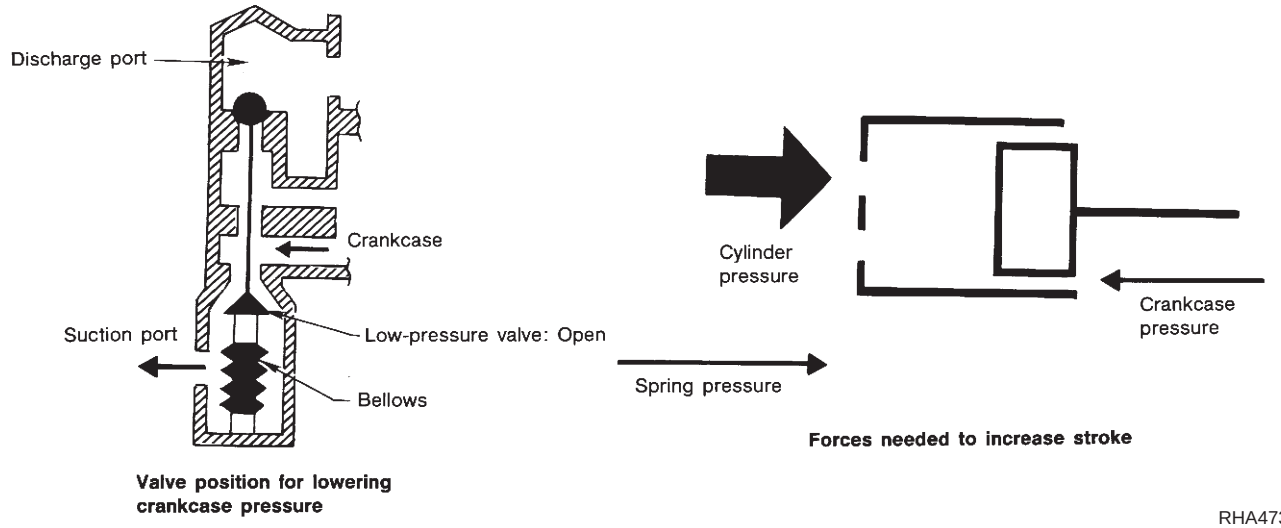

RHA473C

3. Capacity Control

=NFHA0132S0203

- Refrigerant pressure on suction side is low during high speed driving or when ambient or interior temperature is low.
- The bellows expands when refrigerant pressure on the suction pressure side drops below approximately 177 kPa (1.77 bar, 1.8 kg/cm^2, 26 psi).
  Since suction pressure is low, it makes the suction port close and the discharge port open. Thus, crankcase pressure becomes high as high pressure enters the crankcase.
- The force acts around the journal pin near the swash plate, and is generated by the pressure difference before and behind the piston.
  The drive lug and journal pin are located where the piston generates the highest pressure. Piston pressure is between suction pressure Ps and discharge pressure Pd, which is near suction pressure Ps. If crankcase pressure Pc rises due to capacity control, the force around the journal pin makes the swash plate angle decrease and also the piston stroke decrease. In other words, crankcase pressure increase triggers pressure difference between the piston and the crankcase. The pressure difference changes the angle of the swash plate.

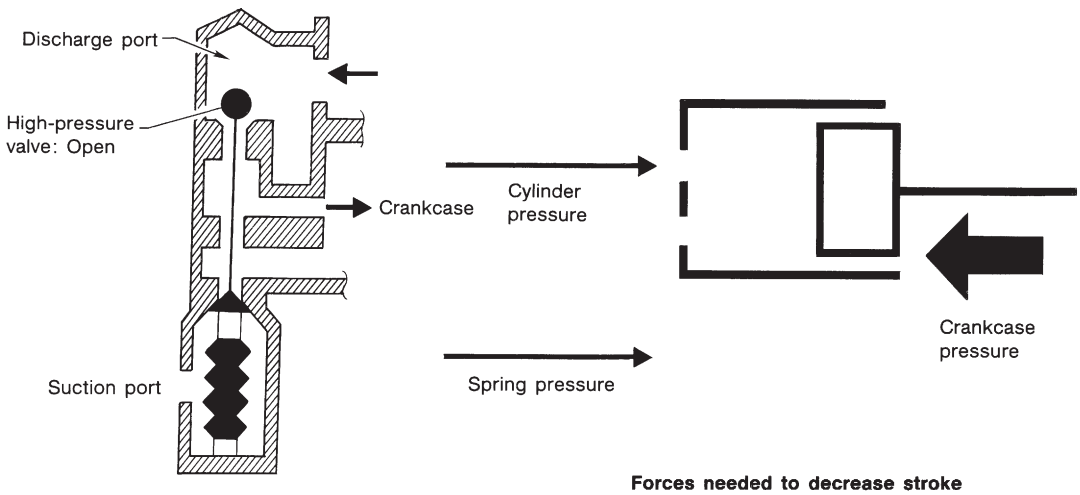

Valve position for raising crankcase pressure

Forces needed to decrease stroke

RHA474C

IACV-AAC CONTROL SYSTEM

=NFHA0133

Operation

NFHA0133S02

When the air conditioner is OFF, the ECM detects the load applied to the engine, and controls the IACV-AAC valve to adjust the engine idling speed to the appropriate rpm by supplying additional air from the IACV-AAC valve.

When the air conditioner is ON (A/C relay is ON), refrigerant-pressure sensor converts refrigeration-pressure on the high pressure side into the voltage value, which is output to ECM which protects refrigeration cycle and control idle speed by the output voltage data, and additional air is supplied to the engine. If the appropriate engine speed is not reached, the IACV-AAC valve supplies the additional air required to increase the engine rpm.

Component Layout

NFHA0071

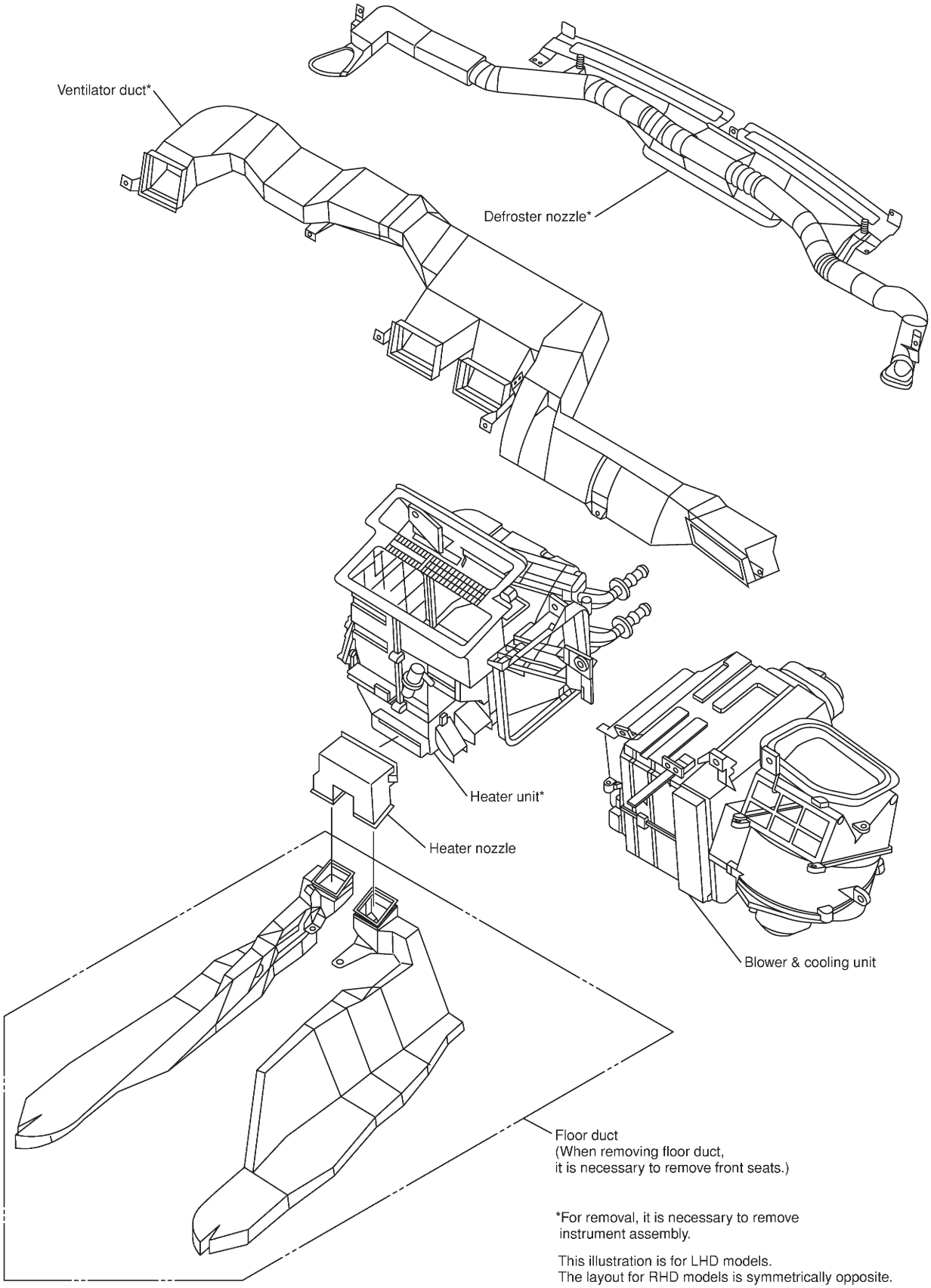

RHA349HA

Control Operation

NFHA0072

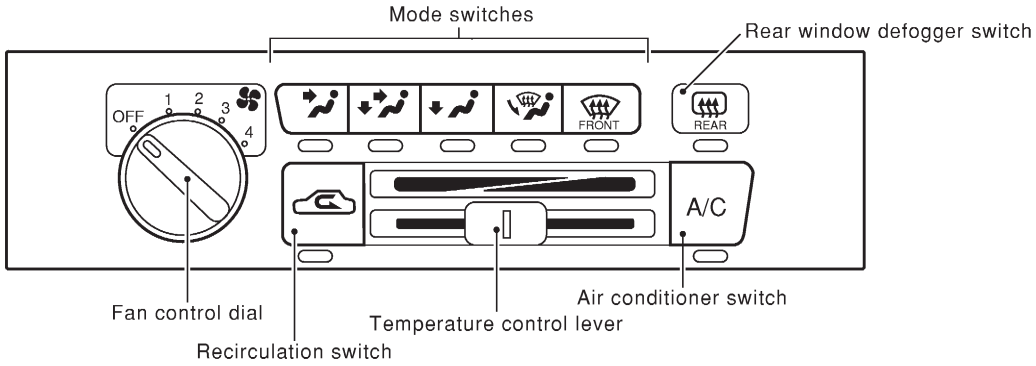

SHA337F

FAN CONTROL DIAL

NFHA0072S01

This dial turns the fan ON and OFF, and controls fan speed.

MODE SWITCHES

NFHA0072S02

This switch allows control of the outlet air flow.
In “DEF” or “D/F” mode, the intake door is set to “FRESH”.
The compressor turns on when the Mode switch is moved to “DEF”.

TEMPERATURE CONTROL LEVER

NFHA0072S03

This lever allows adjustment of the temperature of the outlet air.

RECIRCULATION (REC) SWITCH

NFHA0072S04

OFF position: Outside air is drawn into the passenger compartment.
ON position: Interior air is recirculated inside the vehicle. The indicator lamp will also light.
Recirculation is canceled when DEF or D/F is selected, and resumes when another mode is chosen.
If the refrigerant pressure sensor input signal is high, recirculation is canceled, when VENT, B/L and FOOT mode is selected.

AIR CONDITIONER SWITCH

NFHA0072S05

The air conditioner switch controls the A/C system. When the switch is depressed with the fan ON, the compressor will turn ON. The indicator lamp will also light.
The air conditioner cooling function operates only when the engine is running.

REAR WINDOW DEFOGGER SWITCH

NFHA0072S06

When illumination is ON, rear window is defogging.

Discharge Air Flow

NFHA0073

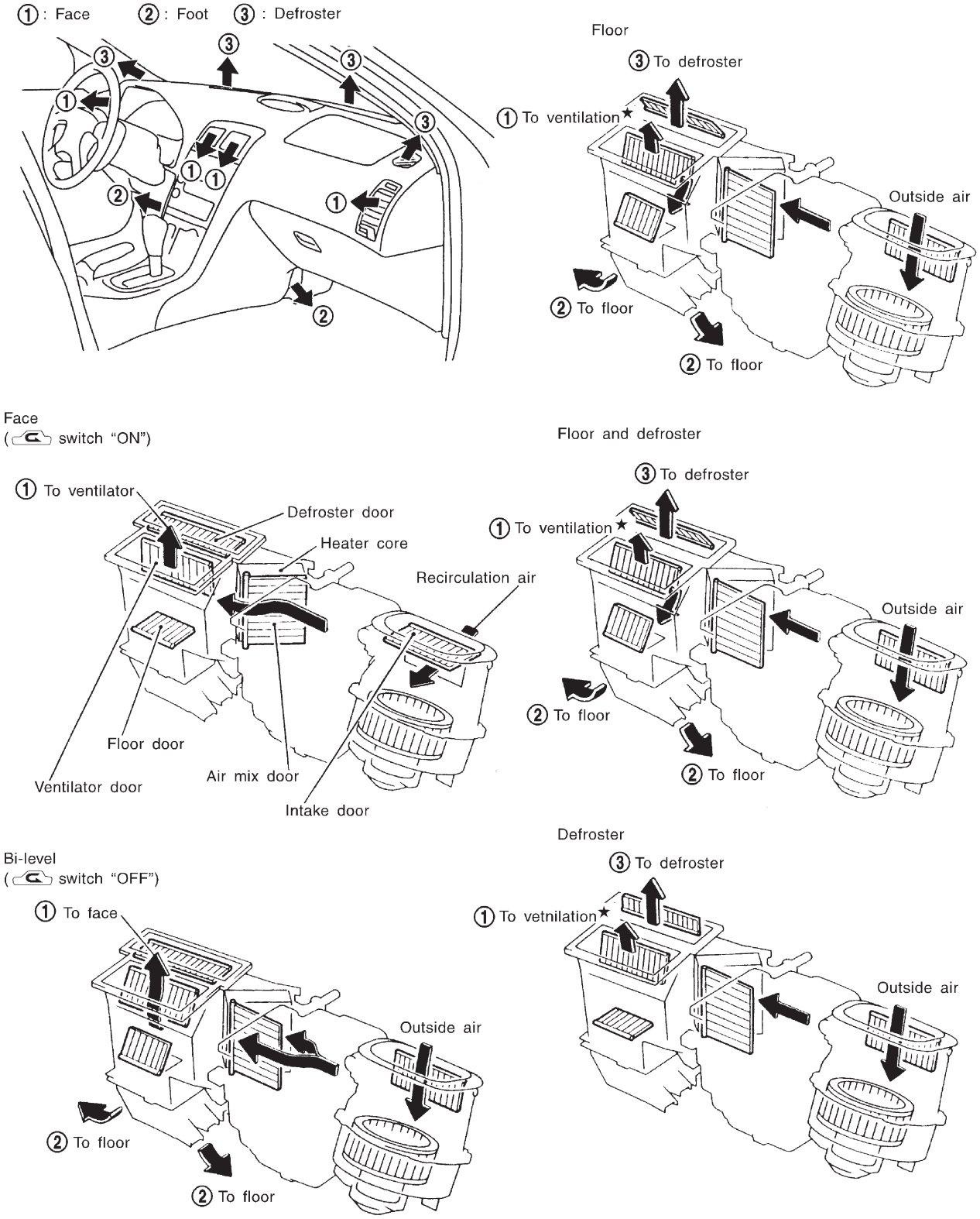

★ : LHD models for Europe.
This illustration is for LHD models.
The layout for RHD models is symmetrically opposite.

SHA424FA

System Description

SWITCHES AND THEIR CONTROL FUNCTIONS

NFHA0074

NFHA0074S01

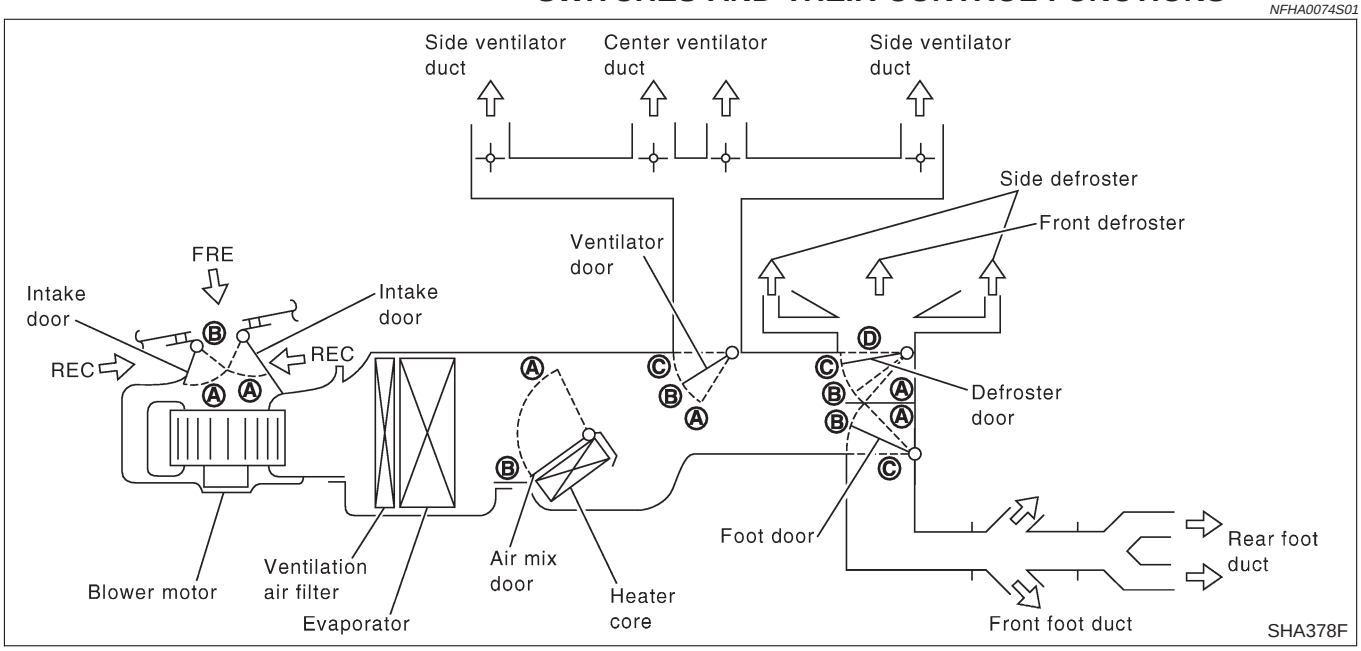

Position or switch	MODE SW				Front DEF SW		A/C SW	Intake SW			Temperature lever		
	VENT	B/L	FOOT	D/F	ON	OFF		REC SW *1		FRE SW			
Door							A/C				18.0˚C (65˚F)	—	32.0˚C (85˚F)
Ventilator door	A	B	*2	*2	*2	—	—				—		
Foot door	C	B	A	B	C						—		
Defroster door	D	D	C	B	A						—		
Air mix door	—				—						B	→	A
Intake door	—				A			B	AUTO	A	—		

*1: In DEF and D/F models, REC switch is canceled.
*2: Except LHD models for Europe: C
LHD models for Europe: B

SHA443F

Component Location

NFHA0085

ENGINE COMPARTMENT

NFHA0085S01

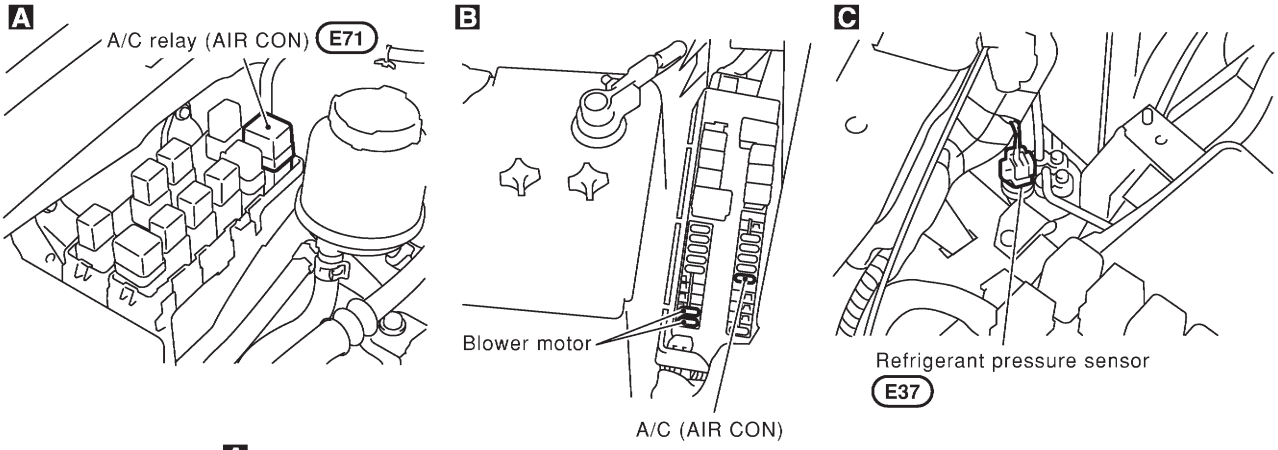

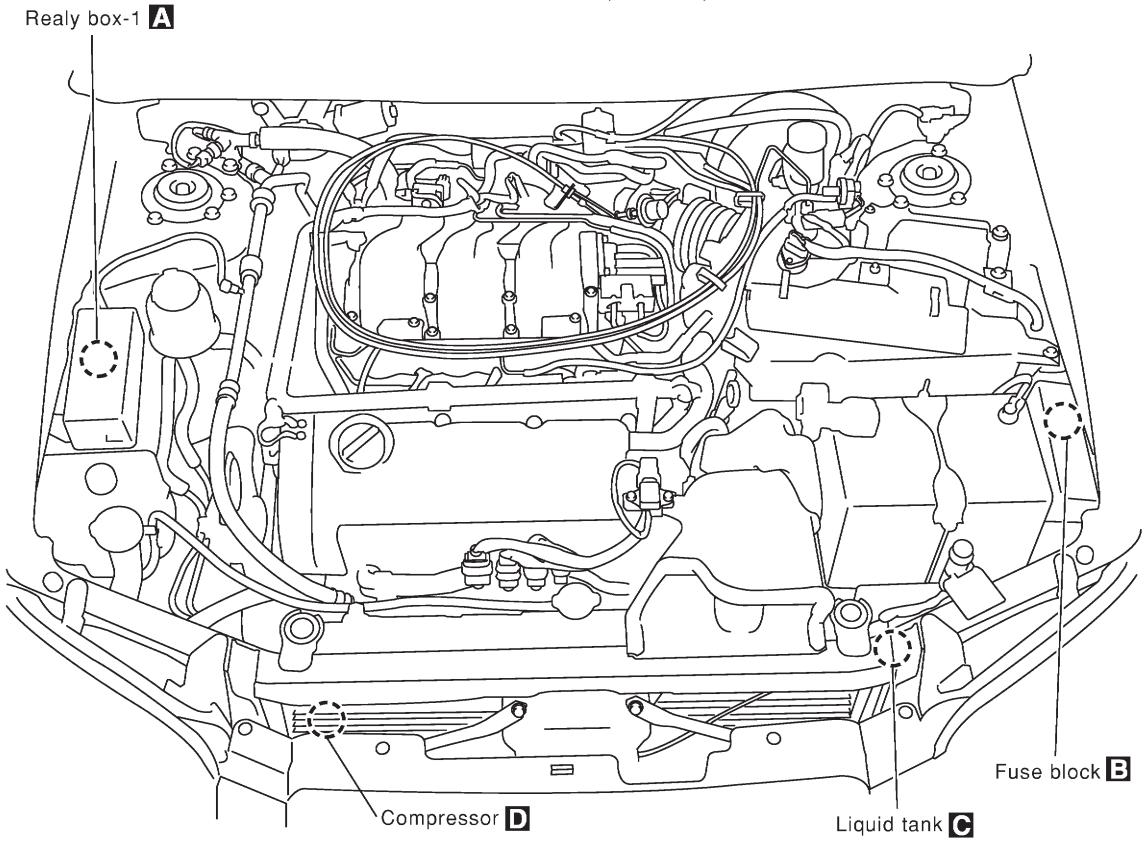

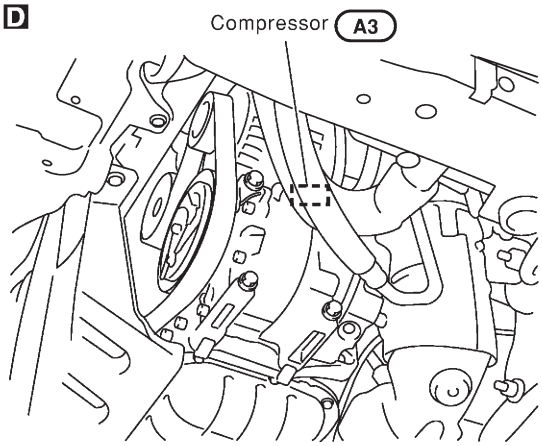

RHA455H

PASSENGER COMPARTMENT

NFHA0085S02

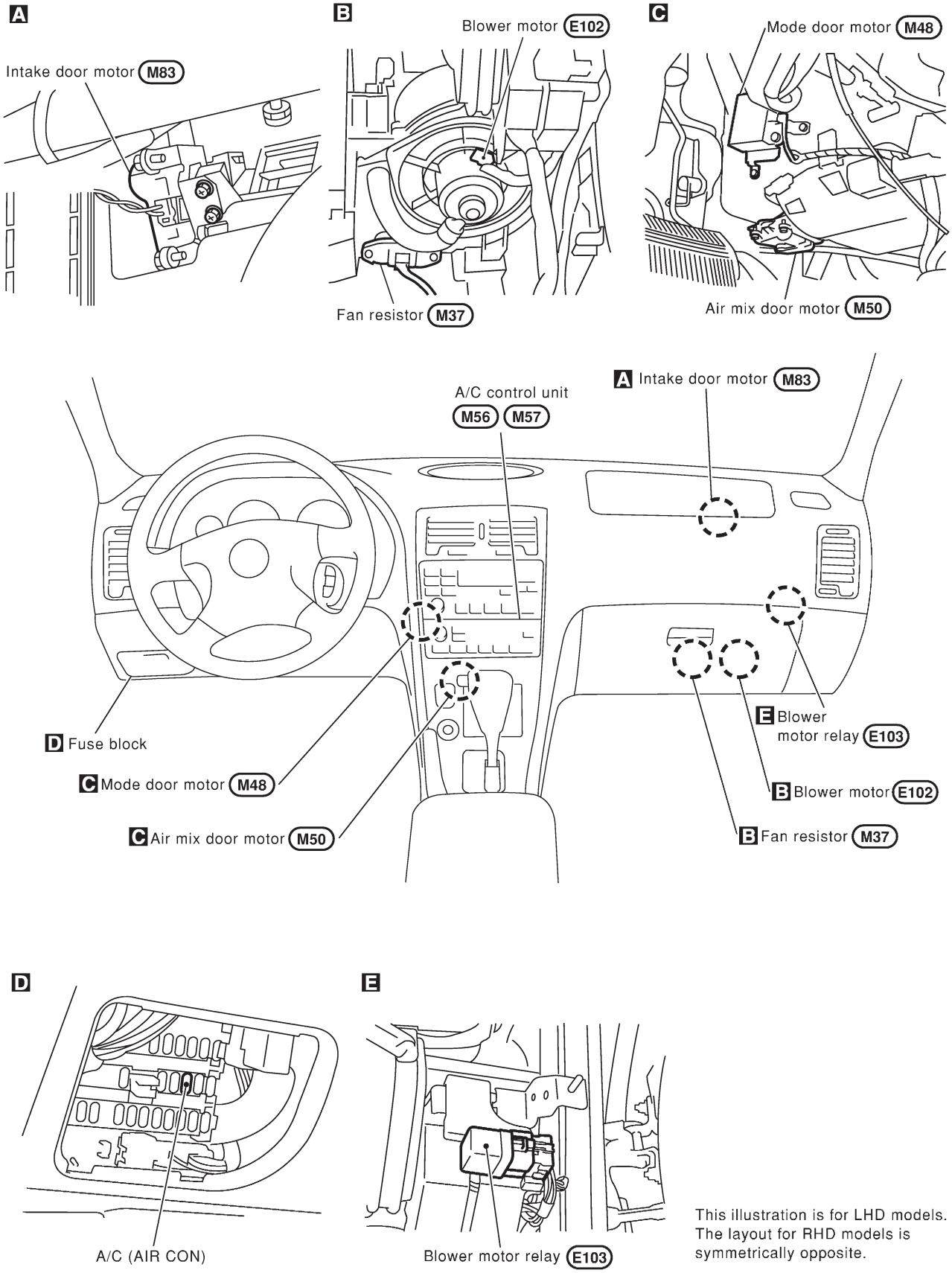

This illustration is for LHD models. The layout for RHD models is symmetrically opposite.

RHA456HA

Circuit Diagram — Air Conditioner

NFHA0087

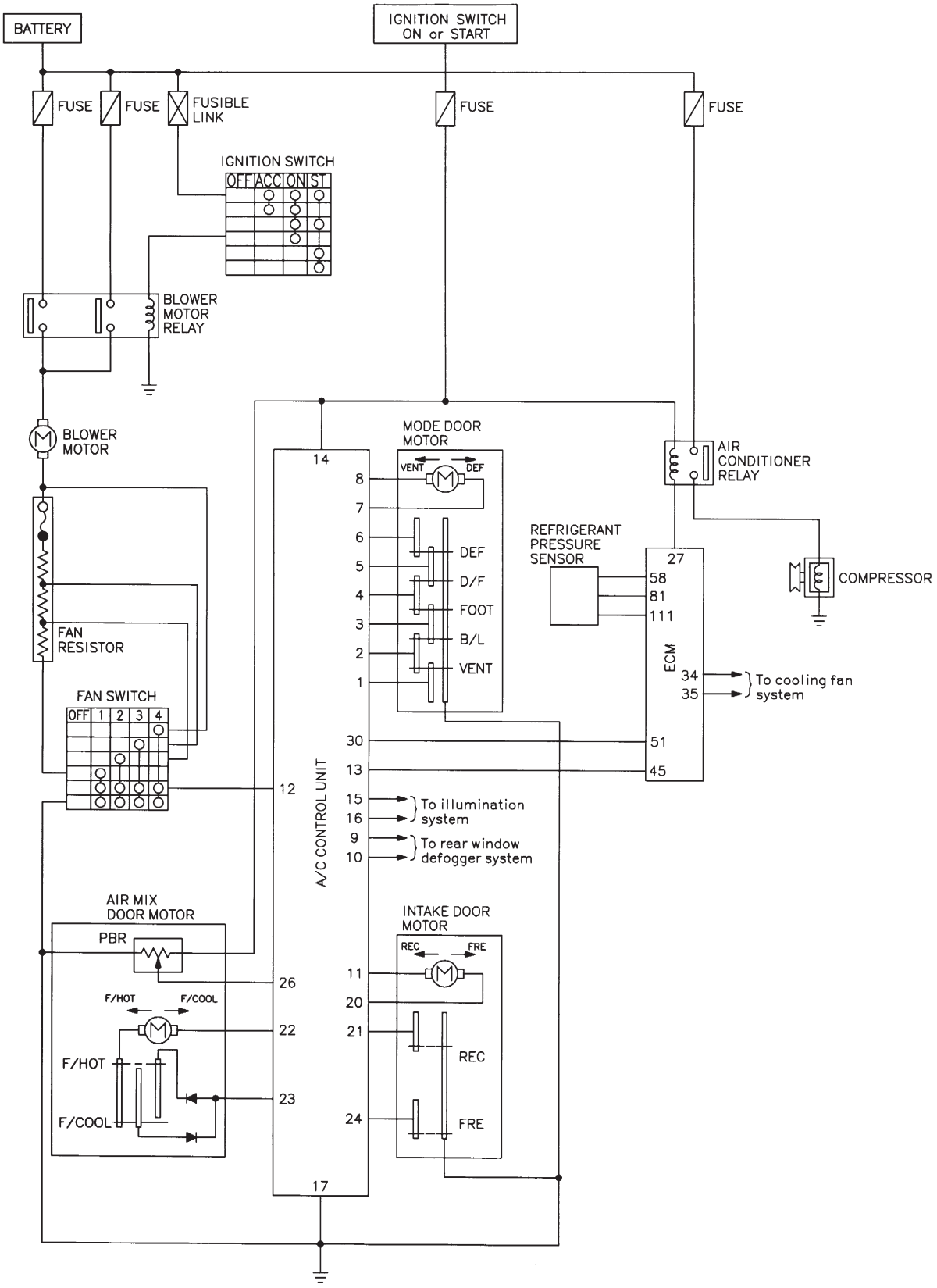

MHA936A

Wiring Diagram — A/C, Heater —

NFHA0265

HA-HEATER-01

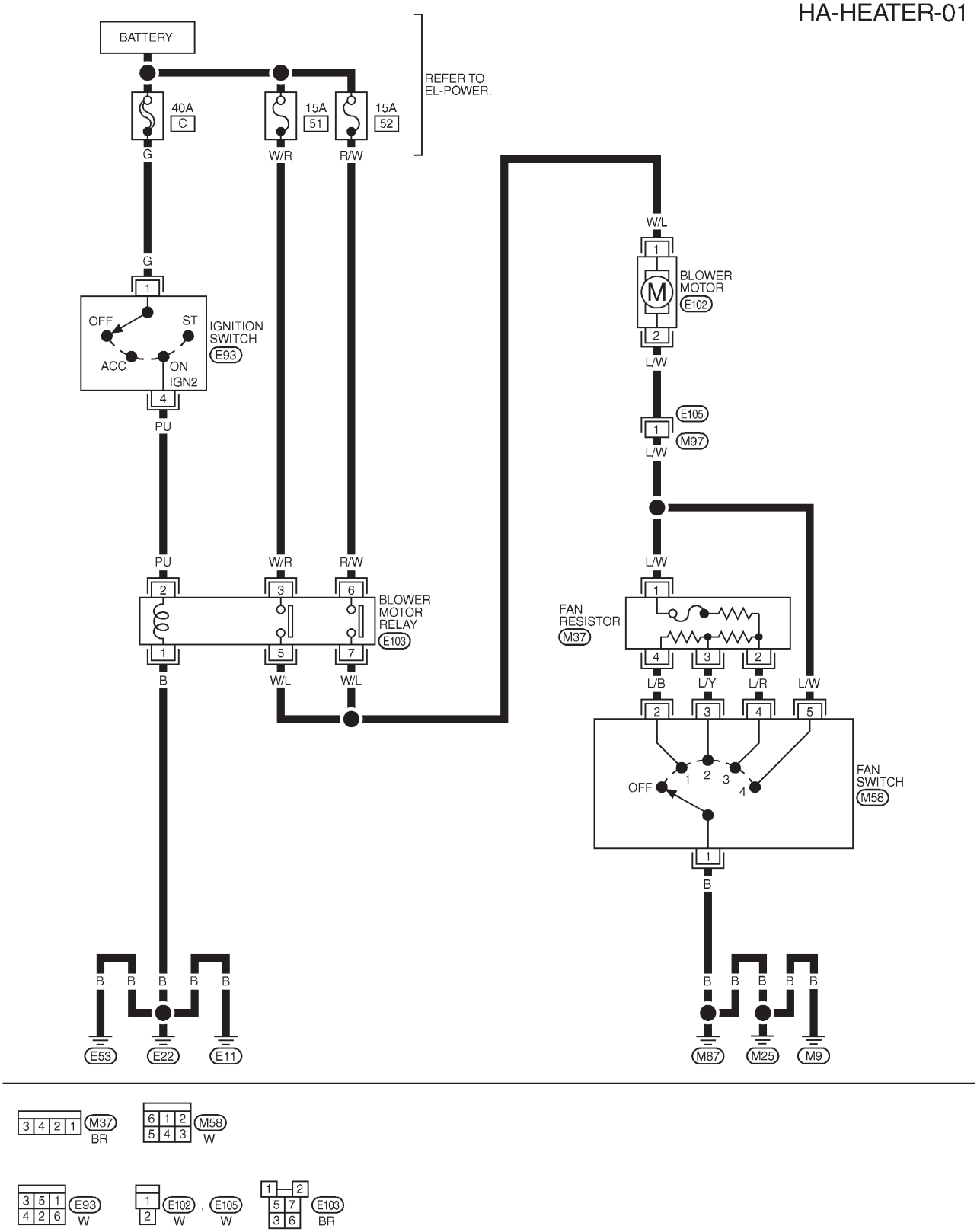

MHA946A

Wiring Diagram — A/C, M —

NFHA0088

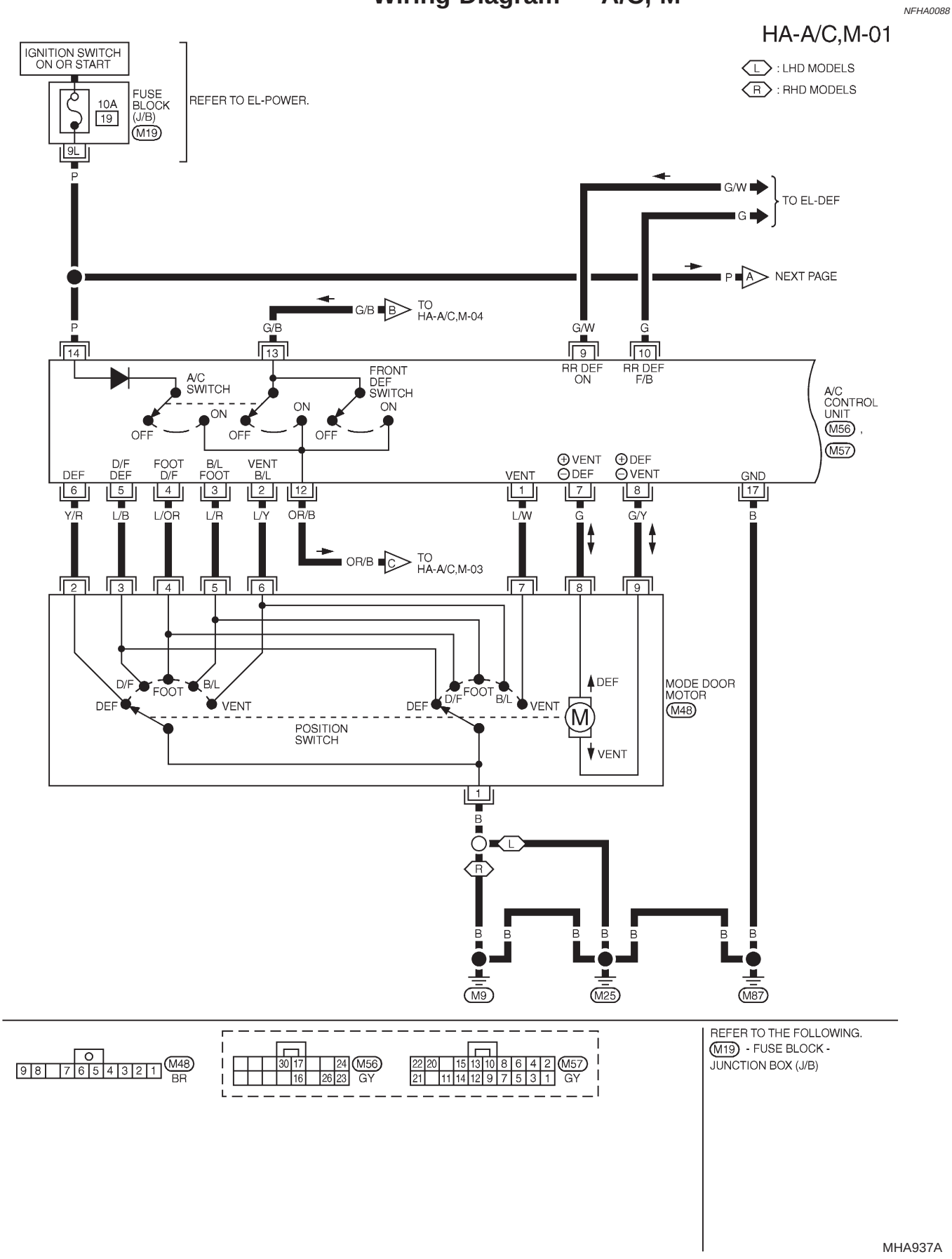

REFER TO THE FOLLOWING.
M19 - FUSE BLOCK - JUNCTION BOX (J/B)

MHA937A

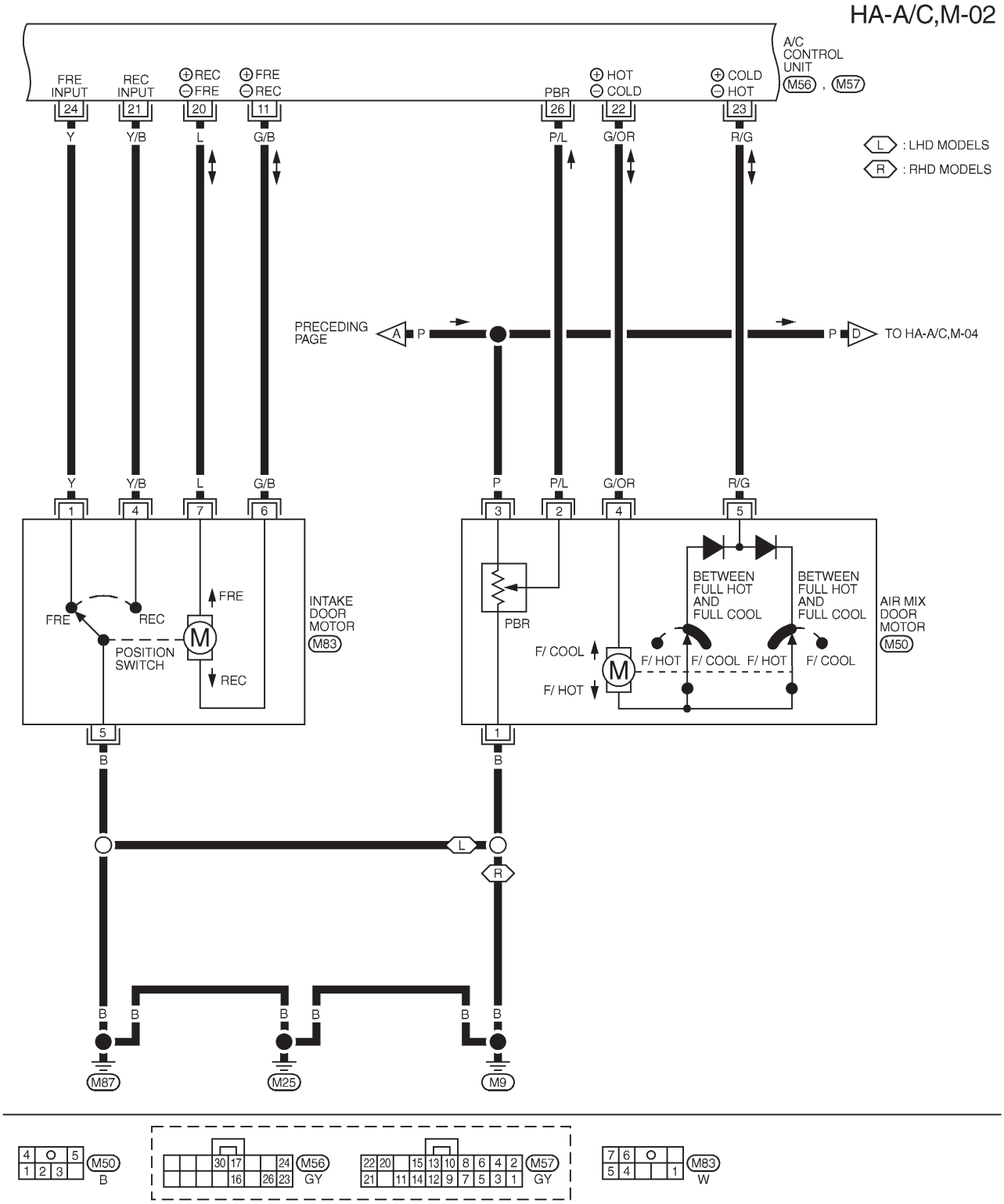
HA-A/C,M-02
A/C CONTROL UNIT
M56 , M57
FRE INPUT
REC INPUT
⊕REC ⊖FRE
⊕FRE ⊖REC
PBR
⊕HOT ⊖COLD
⊕COLD ⊖HOT
24
21
20
11
26
22
23
Y
Y/B
L
G/B
P/L
G/OR
R/G
L : LHD MODELS
R : RHD MODELS
PRECEDING PAGE
A
P
D
TO HA-A/C,M-04
P
1
4
7
6
3
2
5
FRE
REC
POSITION SWITCH
M
INTAKE DOOR MOTOR
M83
PBR
F/ COOL
F/ HOT
BETWEEN FULL HOT AND FULL COOL
AIR MIX DOOR MOTOR
M50
B
M87
M25
M9

M50
B
M56
GY
M57
GY
M83
W

MHA938A

Wiring Diagram — A/C, M — (Cont'd)

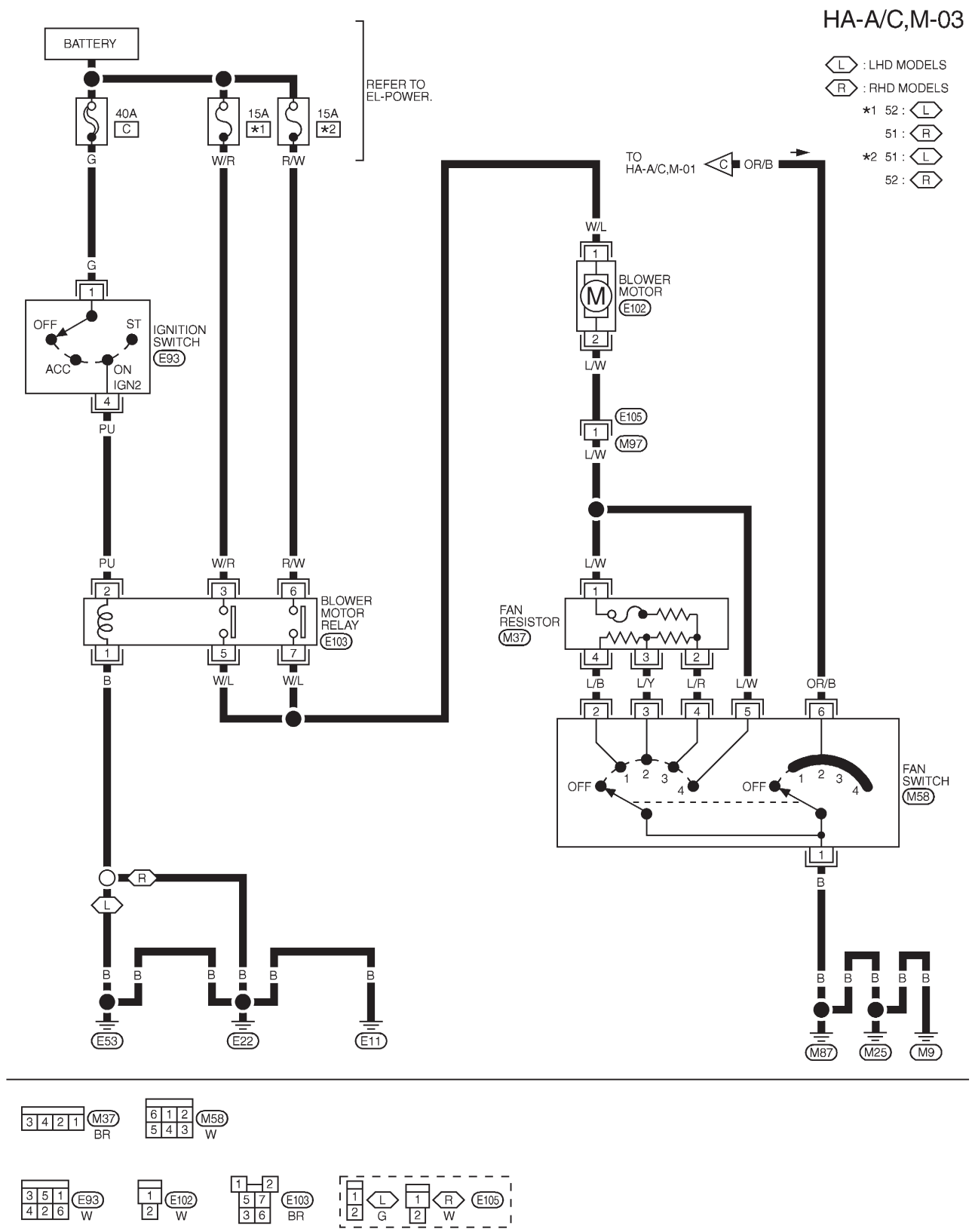

MHA939A

HA-A/C,M-04

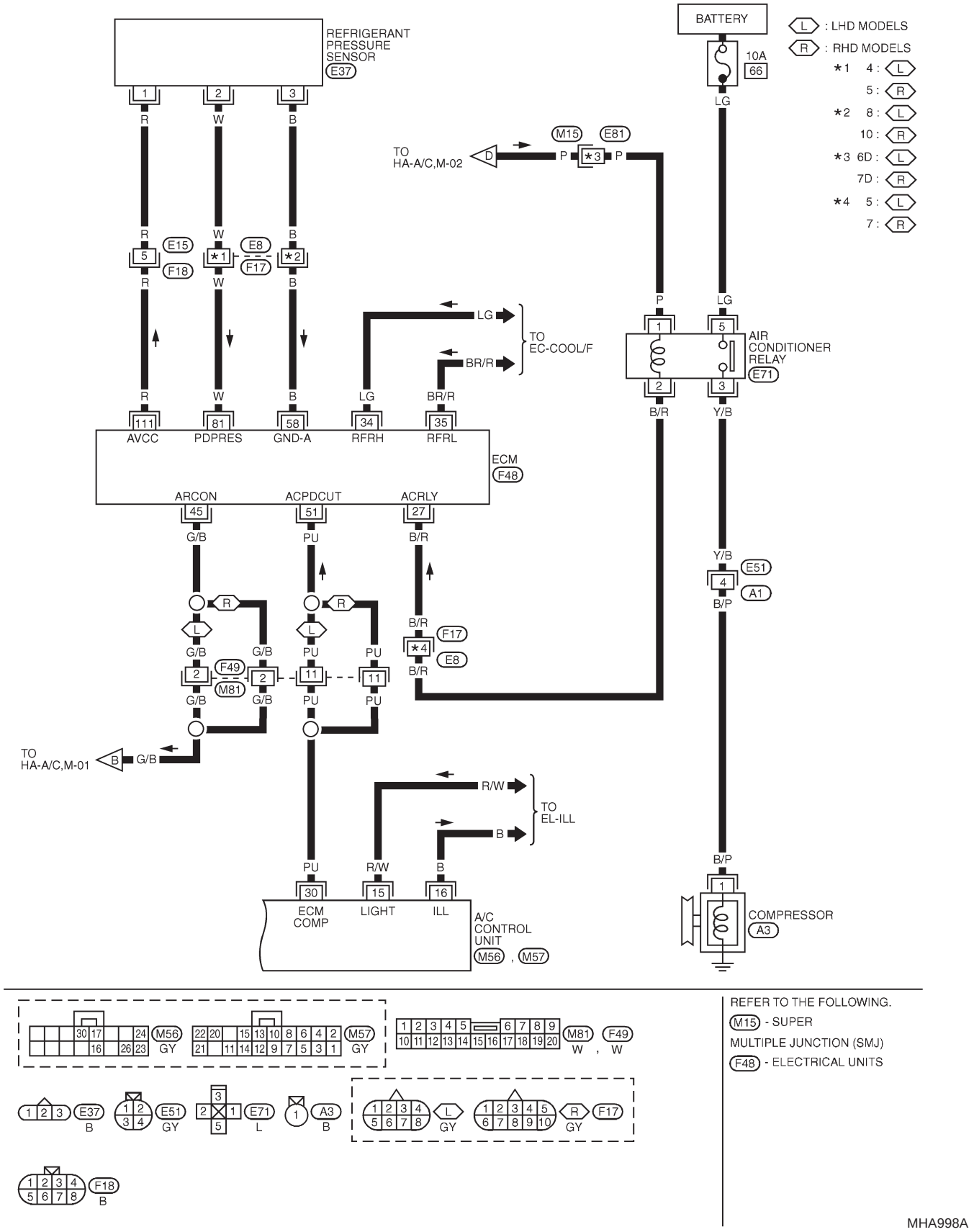
REFRIGERANT PRESSURE SENSOR
E37
BATTERY
10A
66
L : LHD MODELS
R : RHD MODELS
*1 4 : L
5 : R
*2 8 : L
10 : R
*3 6D : L
7D : R
*4 5 : L
7 : R
TO HA-A/C,M-02
M15
E81
E15
F18
E8
F17
TO EC-COOL/F
AIR CONDITIONER RELAY
E71
AVCC
PDPRES
GND-A
RFRH
RFRL
ECM
F48
ARCON
ACPDCUT
ACRLY
F49
M81
F17
E8
E51
A1
TO HA-A/C,M-01
TO EL-ILL
ECM COMP
LIGHT
ILL
A/C CONTROL UNIT
M56 , M57
COMPRESSOR
A3
REFER TO THE FOLLOWING.
M15 - SUPER MULTIPLE JUNCTION (SMJ)
F48 - ELECTRICAL UNITS
MHA998A

How to Perform Trouble Diagnoses for Quick and Accurate Repair

NFHA0075

WORK FLOW

NFHA0075S01

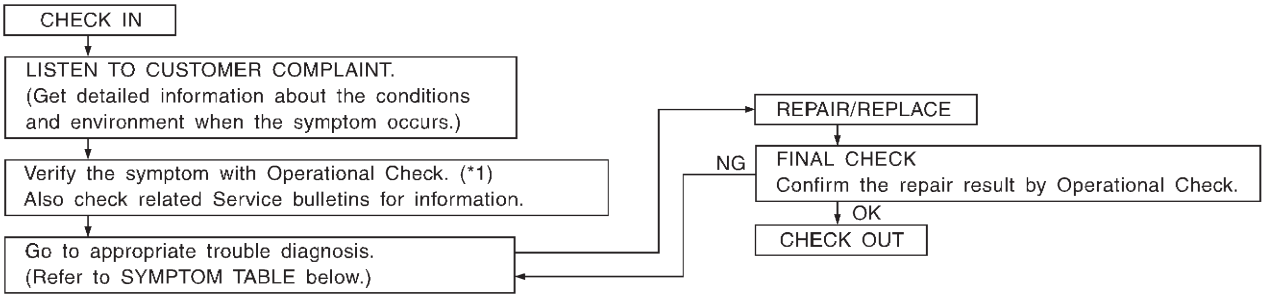

SHA900E

*1: HA-155

SYMPTOM TABLE

NFHA0075S02

Symptom	Reference page	
● A/C system does not come on.	● Go to Trouble Diagnosis Procedure for A/C system.	HA-157
● Mode door does not change.	● Go to Trouble Diagnosis Procedure for Mode door.	HA-160
● Air mix door motor does not operate normally.	● Go to Trouble Diagnosis Procedure for Air mix door motor.	HA-163
● Intake door does not change in VENT, B/L or FOOT mode.	● Go to Trouble Diagnosis Procedure for Intake Door.	HA-167
● Blower motor does not rotate at all.	● Go to Trouble Diagnosis Procedure for Blower Motor.	HA-170
● Magnet clutch does not engage when A/C switch and fan switch are ON.	● Go to Trouble Diagnosis Procedure for Magnet Clutch.	HA-176
● Insufficient cooling.	● Go to Trouble Diagnosis Procedure for Insufficient cooling.	HA-183
● Insufficient heating.	● Go to Trouble Diagnosis Procedure for Insufficient heating.	HA-191
● Noise	● Go to Trouble Diagnosis Procedure for Noise.	HA-192

Operational Check

=NFHA0076

The purpose of the operational check is to confirm that the system operates as it should. The systems which are checked are the blower, mode (discharge air), intake air, temperature decrease, temperature increase.

CONDITIONS:

NFHA0076S01

Engine running at normal operating temperature.

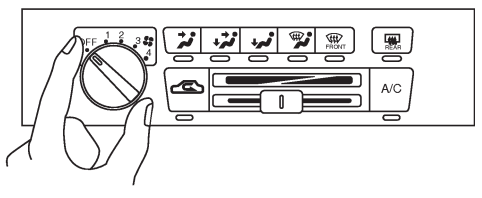

RHA424H

PROCEDURE:

NFHA0076S02

1. Check Blower

NFHA0076S0201

1. Turn fan control dial to 1-speed.
   Blower should operate on 1-speed.
2. Then turn fan control dial to 2-speed.
3. Continue checking blower speed until all four speeds are checked.
4. Leave blower on 4-speed.

If NG, go to trouble diagnosis procedure for blower motor (HA-170).
If OK, continue with next check.

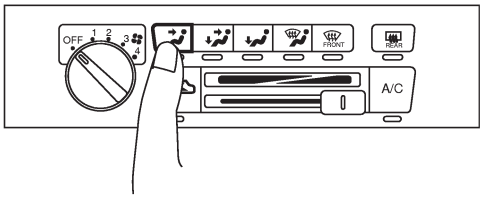

RHA425H

2. Check Discharge Air

NFHA0076S0202

1. Press each mode switch.

Discharge air flow

Mode switch	Air outlet/distribution		
	Face	Foot	Defroster
	100%	–	–
	60%	40%	–
	– (20%)	80% (63%)	20% (17%)
	– (20%)	60% (45%)	40% (35%)
	– (20%)	–	100% (80%)

( ): LHD models for Europe

SHA345FB

2. Confirm that discharge air comes out according to the air distribution table at left.
   Refer to “Discharge Air Flow” in “DESCRIPTION” (HA-144).

NOTE:

Confirm that the compressor clutch is engaged (visual inspection) and intake door position is at FRESH when the DEF ( ) is pressed.
Confirm that the intake door position is at FRESH when the D/F ( ) is pressed.
Intake door position is checked in the next step.

If NG, go to trouble diagnosis procedure for mode door motor (HA-160).
If OK, continue with next check.

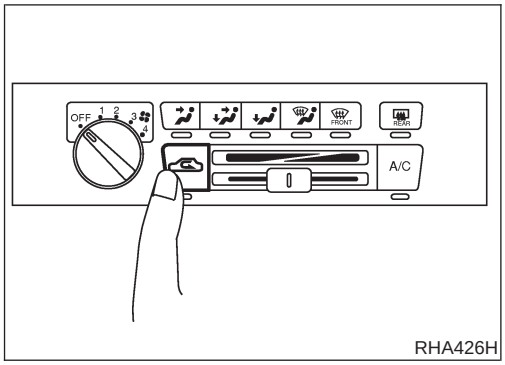

RHA426H

3. Check Recirculation

NFHA0076S0203

1. Press recirculation switch.
   Recirculation indicator should light.
2. Listen for intake door position change (you should hear blower sound change slightly).

NOTE:
Confirm that the RECIRCULATION (REC) switch is canceled in the DEF ( ) and D/F ( ) mode.

If NG, go to trouble diagnosis procedure for intake door motor (HA-167).
If OK, continue with next check.

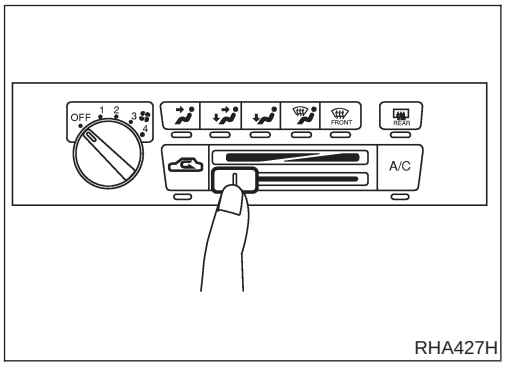

RHA427H

4. Check Temperature Decrease

NFHA0076S0204

1. Slide temperature control lever to full cold.
2. Check for cold air at discharge air outlets.

If NG, go to trouble diagnosis procedure for insufficient cooling motor (HA-183).
If OK, continue with next check.

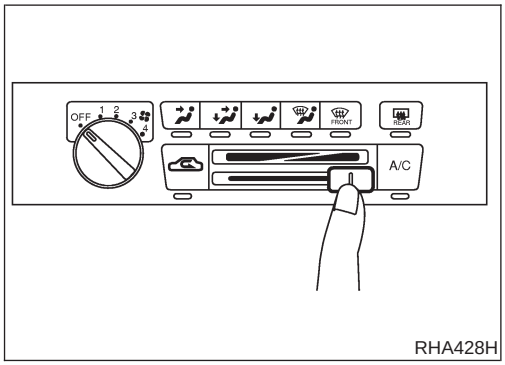

RHA428H

5. Check Temperature Increase

NFHA0076S0205

1. Slide temperature control lever to full hot.
2. Check for hot air at discharge air outlets.

If NG, go to trouble diagnosis procedure for insufficient heating motor (HA-191).
If OK, continue with next check.

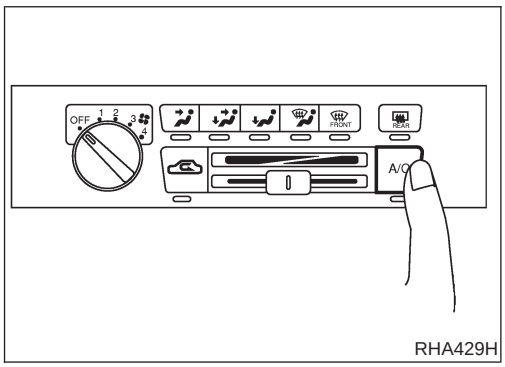

RHA429H

6. Check Air Conditioner Switch

NFHA0076S0206

Turn fan control switch to the desired (1 to 4-speed) position and push the air conditioner switch to turn ON the air conditioner.
The indicator light should come on when air conditioner is ON.
If NG, go to trouble diagnosis procedure for A/C system (HA-157).
If OK, continue with next check.
If all operational check are OK (symptom can not be duplicated), go to "Incident Simulation Tests" (***GI-23***) and perform tests as outlined to simulate driving conditions environment. If symptom appears, refer to "Symptom Table" (HA-154) and perform applicable trouble diagnosis procedures.

A/C System

TROUBLE DIAGNOSIS PROCEDURE FOR A/C SYSTEM

=NFHA0253

Symptom:

- **A/C system does not come on.**

INSPECTION FLOW

1. Confirm symptom by performing the following operational check.

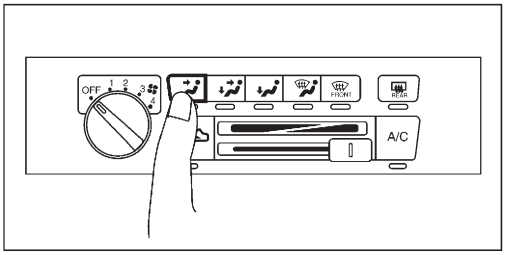

OPERATIONAL CHECK

Confirm that the system operate normally.

If OK (symptom cannot be duplicated), perform complete operational check (*2).
If NG (symptom is confirmed), continue with STEP-2 following.

↓

2. Check for any service bulletins.

OK ↓

3. Check main power supply and ground circuit. (*1)

OK ↓

4. Go to A/C system circuit. (*3)

OK ↓

5. Replace push control unit.

OK ↓

INSPECTION END

RHA569H

*1: HA-158 *2: HA-155 *3: HA-148

MAIN POWER SUPPLY AND GROUND CIRCUIT CHECK

=NFHA0254

Power Supply Circuit Check

NFHA0254S01

Check power supply circuit for air conditioner system.
Refer to *EL-10*, "Wiring Diagram — POWER —".

DIAGNOSTIC PROCEDURE

NFHA0255

SYMPTOM:

- **A/C system does not come on.**

1	CHECK POWER SUPPLY CIRCUIT FOR A/C CONTROL UNIT

Measure voltage across terminal No. 14 and body ground.

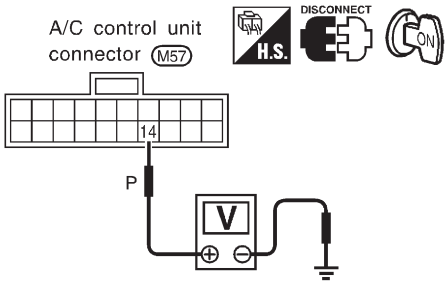

RHA386HA

Votmeter terminal		Voltage
(+)	(–)	
14	Body ground	Approx. 12V

MTBL0323

OK or NG

OK	▶	GO TO 2.
NG	▶	Check 10A fuse (No. 19) at fuse block.

2	CHECK BODY GROUND CIRCUIT FOR A/C CONTROL UNIT

Check for continuity between terminal No. 17 and body ground.

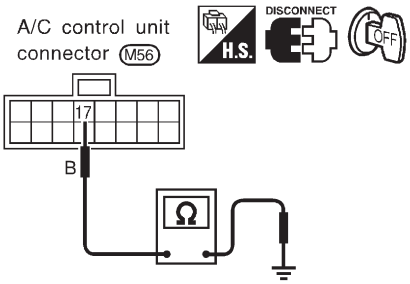

RHA391H

Ohmmeter terminal		Continuity
(+)	(–)	
17	Body ground	Yes

MTBL0324

OK or NG

OK	▶	**INSPECTION END**
NG	▶	If NG, repair harness or connector.

Mode Door

TROUBLE DIAGNOSIS PROCEDURE FOR MODE DOOR

=NFHA0142

Symptom:

- **Air outlet does not change.**

Inspection Flow

1. Confirm symptom by performing the following operational check.

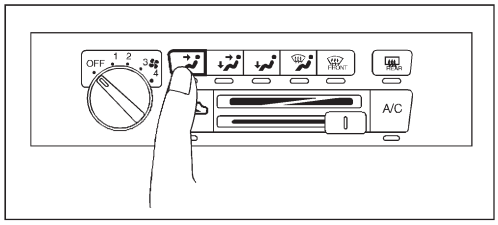

OPERATIONAL CHECK – Discharge air.

1) Push mode switch.

2) Confirm that discharge air comes out according to the air distribution table at left.
Refer to "Discharge Air Flow" in "DESCRIPTION" (*4).

Discharge air flow

Mode switch	Mode door/distribution		
	Face	Foot	Defroster
	100%	–	–
	60%	40%	–
	– (20%)	80% (63%)	20% (17%)
	– (20%)	60% (45%)	40% (35%)
	– (20%)	–	100% (80%)

( ): LHD models for Europe

2. Check for any service bulletins.

3. Check mode door operation. (*1)

NG → Go to Trouble Diagnosis Procedure for mode door motor. (*5)

OK → If the symptom still exist, perform a complete operational check (*2) and check for other symptoms.
[Refer to symptom table, (*3).]
Does another symptom exist?

Yes → Go to Trouble Diagnosis for related symptom.
[Another symptom exists.]

No → INSPECTION END

RHA445HB

*1: HA-162
*2: HA-155
*3: HA-154
*4: HA-144
*5: HA-161

DIAGNOSTIC PROCEDURE

=NFHA0260

SYMPTOM:

- **Mode door motor does not operate normally.**

1	CHECK POWER SUPPLY FOR A/C CONTROL UNIT	
Refer to "MAIN POWER SUPPLY AND GROUND CIRCUIT CHECK", HA-158.		
OK or NG		
OK	▶	GO TO 2.
NG	▶	Repair or replace.

2	CHECK FOR OUTPUT OF A/C CONTROL UNIT	
Do approx. 10.5 volts exist between mode door motor harness terminal Nos. 8, 9 and body ground?		

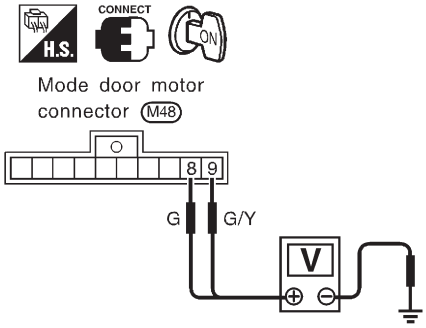

Mode door operation	Terminal No. (+)	Terminal No. (–)	Voltage
VENT → DEF	9	Body ground	Approx. 10.5V
DEF → VENT	8		

SHA328F

Yes or No		
Yes	▶	GO TO 4.
No	▶	GO TO 3.

3	CHECK CIRCUIT CONTINUITY BETWEEN MODE DOOR MOTOR AND A/C CONTROL UNIT	
Check circuit continuity between mode door motor harness terminal Nos. 8, (9) and A/C control unit harness terminal Nos. 7, (8).		

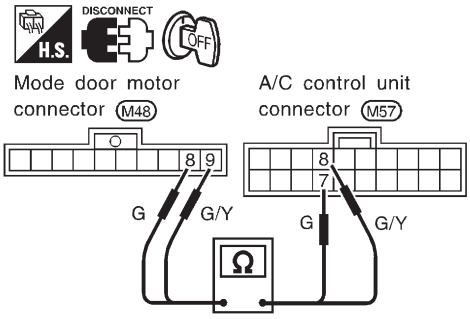

RHA574H

Continuity should exist.
If OK, check harness for short.

OK or NG		
OK	▶	Replace A/C control unit.
NG	▶	Repair harness or connector.

4	CHECK CIRCUIT CONTINUITY BETWEEN MODE DOOR MOTOR AND A/C CONTROL UNIT

Check circuit continuity between mode door motor harness terminal and A/C control unit harness terminal.

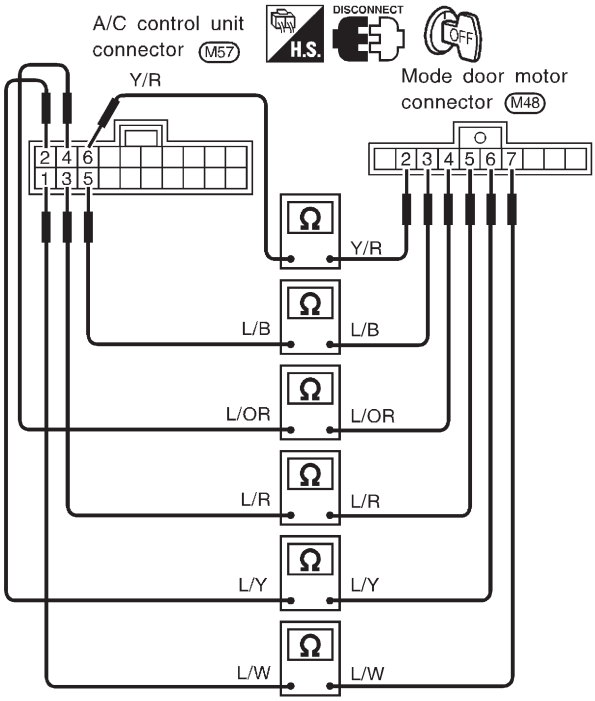

RHA395HB

Continuity should exist.
If OK, check harness for short.

OK or NG

OK	▶	Replace air mix door motor.
NG	▶	Repair harness or connector.

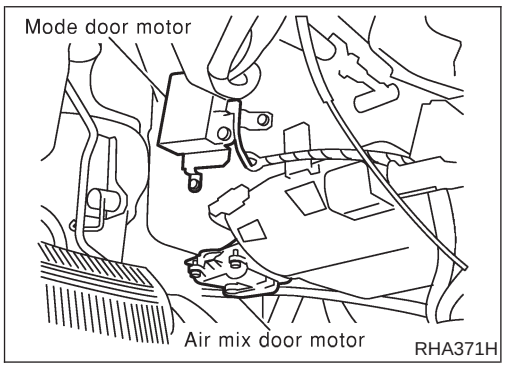

CONTROL LINKAGE ADJUSTMENT

NFHA0151

Mode Door

NFHA0151S01

1. Install mode door motor on heater unit and connect it to main harness.
   Make sure lever of mode door motor is fitted into the slit of mode door link.
2. Turn ignition switch to ON.
3. Turn VENT switch ON.
4. Turn DEF switch ON. Check that slide link operates at the full-open position.
   Also turn DEF switch ON to check that slide link operates at the fully-open position.

Air Mix Door

TROUBLE DIAGNOSIS PROCEDURE FOR AIR MIX DOOR MOTOR

=NFHA0256

SYMPTOM:

- **Air mix door motor does not operate normally.**

INSPECTION FLOW

1. Confirm symptom by performing the following operational check.

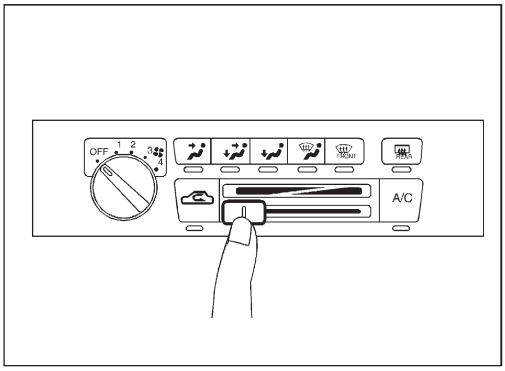

OPERATIONAL CHECK – Temperature decrease and increase

1. Check Temperature Decrease
a) Slide temperature control lever to full cold.
b) Check for cold air at discharge air outlets.

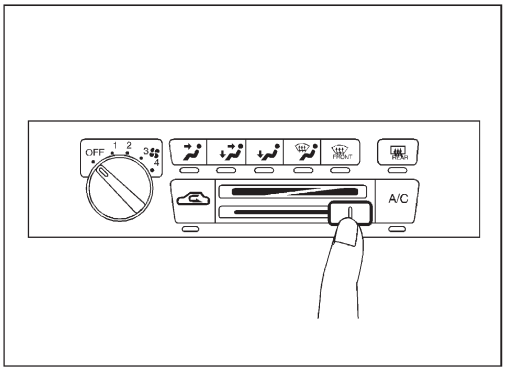

2. Check Temperature Increase
a) Slide temperature control lever to full hot.
b) Check for hot air at discharge air outlets.

If OK (symptom cannot be duplicated). Perform complete operational check. (*3)
If NG (symptom is confirmed), continue with STEP-2 following.

2. Check for any service bulletins.

3. Check air mix door. (*1)

OK

4. Check air mix door motor circuit. (*2)

OK

If the symptom still exist, perform a complete operational check and check for other symptoms.
[Refer to symptom table.]
Does another symptom exist?

Yes → Go to Trouble Diagnosis for related symptom.

[Another symptom exists.]

No → INSPECTION END

SHA335F

*1: HA-166 *2: HA-165 *3: HA-155

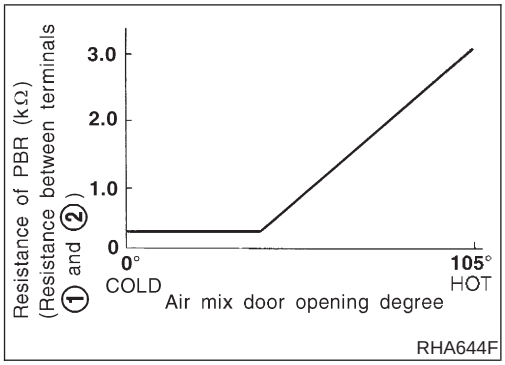

RHA644F

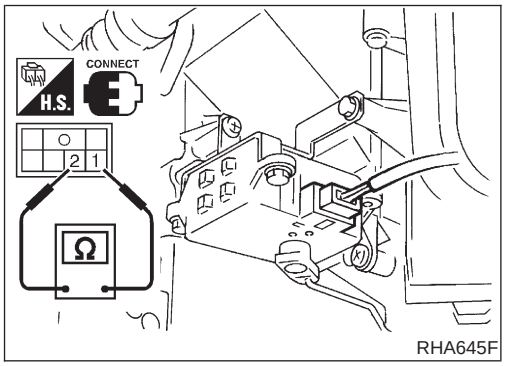

RHA645F

CONTROL SYSTEM INPUT COMPONENT

NFHA0258

PBR

NFHA0258S01

Measure resistance between terminals 1 and 2 at vehicle harness side.

DIAGNOSTIC PROCEDURE

=NFHA0259

SYMPTOM:

- **Air mix door motor does not operate normally.**

1	CHECK POWER SUPPLY FOR A/C CONTROL UNIT	
Refer to "MAIN POWER SUPPLY AND GROUND CIRCUIT CHECK", HA-158.		
OK or NG		
OK	▶	GO TO 2.
NG	▶	Repair or replace.

2	CHECK PBR	
Refer to HA-164.		
OK or NG		
OK	▶	GO TO 3.
NG	▶	Replace air mix door motor.

3	CHECK FOR OUTPUT OF AUTO AMP.	
Do approx. 10.5 volts exist between air mix door motor harness terminal Nos. 4, 5 and body ground?		

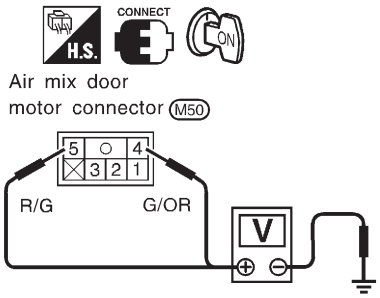

Air mix door operation	Terminal No. (+)	Terminal No. (–)	Voltage
Cold → Hot	4	Body ground	Approx. 10.5V
Hot → Cold	5		

SHA327F

Yes or No

Yes	▶	GO TO 4.
No	▶	Replace A/C control unit.

4	CHECK POWER SUPPLY FOR PBR.	
Do approx. 12 volts exist between air mix door motor harness terminal No. 3 and body ground?		

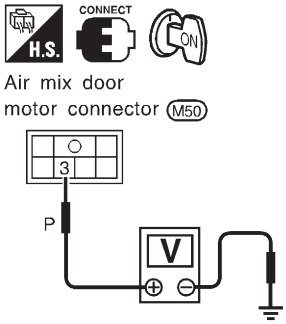

RHA572H

Yes or No

Yes	▶	GO TO 5.
No	▶	Check 10A (No. 19) fuse at fuse block. Refer to ***EL-10***, "Wiring Diagram — POWER —".

5	CHECK GROUND CIRCUIT FOR PBR.

Check circuit continuity between air mix door motor harness terminal No. 1 and body ground.

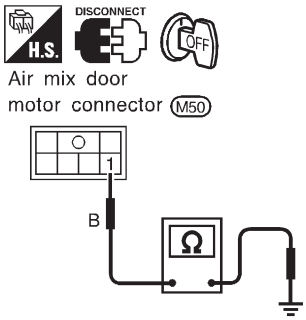

RHA573H

OK or NG

OK	▶	GO TO 6.
NG	▶	Repair harness or connector.

6	CHECK CIRCUIT CONTINUITY BETWEEN AIR MIX DOOR MOTOR AND A/C CONTROL UNIT

Check circuit continuity between air mix door motor harness terminal Nos. (4), 5 and A/C control unit harness terminal Nos. (22), 23.

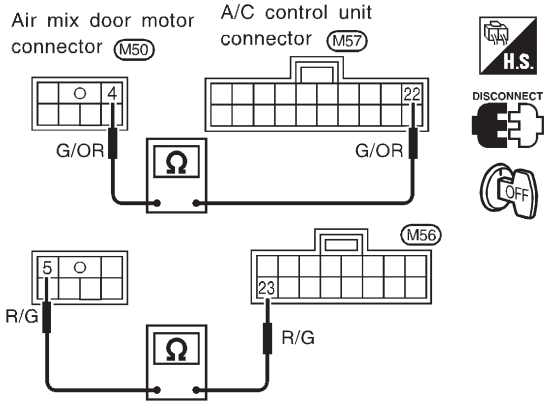

RHA380H

Continuity should exist.
If OK, check harness for short.

OK or NG

OK	▶	Replace air mix door motor.
NG	▶	Repair harness or connector.

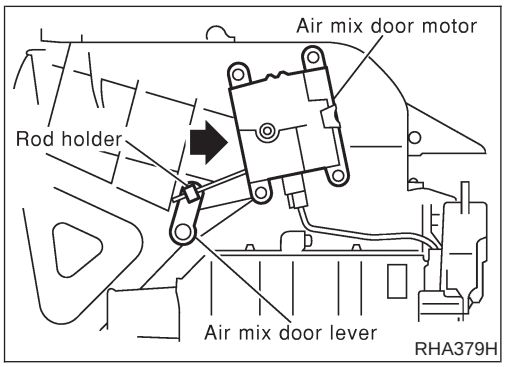

CONTROL LINKAGE ADJUSTMENT

NFHA0257

Air Mix Door

NFHA0257S01

1. Install air mix door motor on heater unit and connect it to main harness.
   Make sure lever of air mix door is fitted into the slit of the air mix door link.
2. Turn ignition switch to ON.
3. Slide temperature control lever to full cold.
4. Check that air mix door operates properly when temperature control lever is slid to full hot and full cold.

Intake Door

TROUBLE DIAGNOSIS PROCEDURE FOR INTAKE DOOR

=NFHA0135

Symptom:

- **Intake door does not change in VENT, B/L or FOOT mode.**

Inspection Flow

1. Confirm symptom by performing the following operational check.

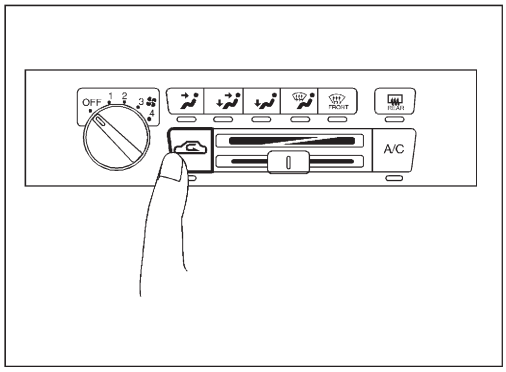

OPERATIONAL CHECK – Recirculation

1) Press recirculation switch.
   Recirculation indicator should light.
2) Listen for intake door position change (you should hear blower sound change slightly).

NOTE:
Confirm that the RECIRCULATION (REC) switch is canceled in the DEF ( ) and D/F ( ) mode.

If OK (symptom cannot be duplicated), perform complete operational check (*2).
If NG (symptom is confirmed), continue with STEP-2 following.

2. Check for any service bulletins.

3. Check intake door motor circuit. (*1)

OK

If the symptom still exist, perform a complete operational check (*2) and check for other symptoms.
[Refer to symptom table, (*3).]
Does another symptom exist?

Yes → Go to Trouble Diagnosis for related symptom.
[Another symptom exists.]

INSPECTION END

RHA430HA

*1: HA-168 *2: HA-155 *3: HA-154

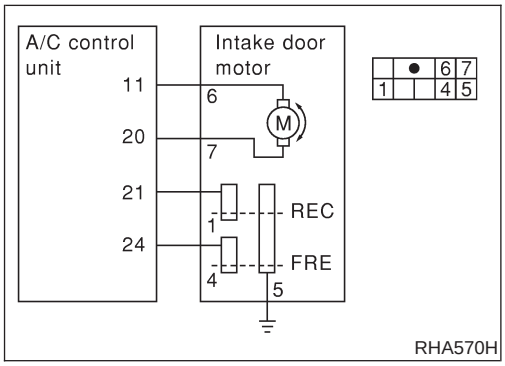

SYSTEM DESCRIPTION

NFHA0136

Intake Door Motor

NFHA0136S01

The intake door motor is installed on the blower and intake unit. Using a link it opens and closes the intake door.
When RECIRCULATION switch is at REC (except DEF and D/F modes), the A/C control unit sets the intake door at the “RECIRCULATION” position.
RECIRCULATION switch is canceled by MODE switch in DEF and D/F modes.

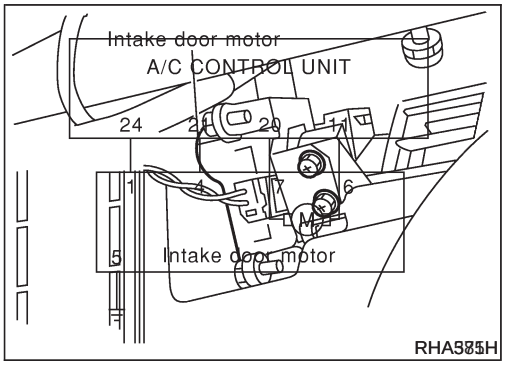

DIAGNOSTIC PROCEDURE

NFHA0090

SYMPTOM: Intake door motor does not operate normally.

1	CHECK BODY GROUND CIRCUIT FOR INTAKE DOOR MOTOR

Does continuity exist between intake door harness terminal No. 5 and body ground?

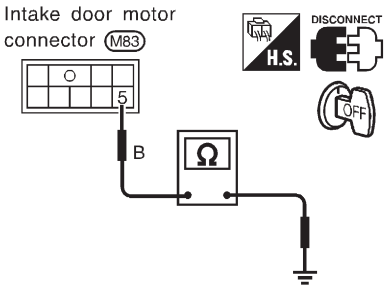

RHA433H

Yes or No

Yes	▶	GO TO 2.
No	▶	Repair harness or connector.

2	CHECK FOR A/C CONTROL UNIT OUTPUT

Measure voltage across auto amp. harness terminals and body ground.

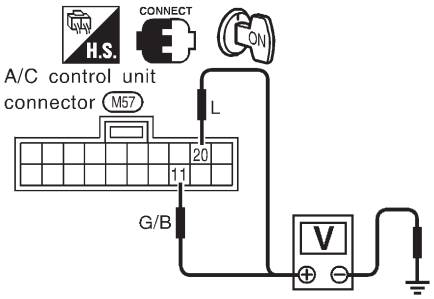

Recirculation switch condition	Terminals No. (+)	Terminals No. (−)	Condition	Voltage V
REC	20	Body ground	REC	12
	11			0
FRE	11		FRE	12
	20			0

0V: Approx. 0V
12V: Approx. 12V

SHA324FA

OK or NG

OK	▶	GO TO 3.
NG	▶	Replace A/C control unit.

3	CHECK CIRCUIT CONTINUITY BETWEEN A/C CONTROL UNIT AND INTAKE DOOR MOTOR

Check circuit continuity between each terminal on A/C control unit and on intake door motor.

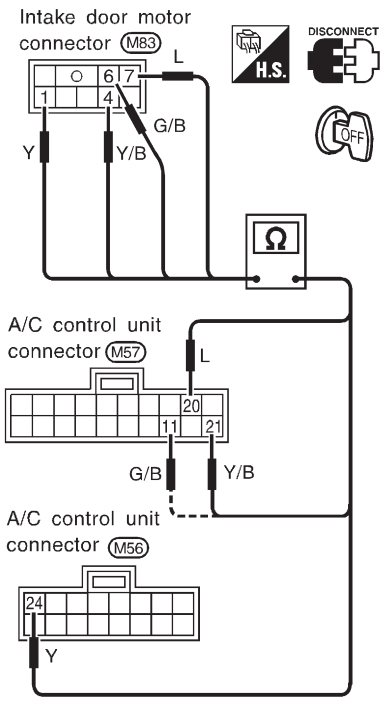

Terminal No.		Continuity
A/C CONTROL UNIT	Intake door motor	
11	6	Yes
20	7	
21	4	
24	1	

RHA435HA

Continuity should exist.

If OK, check harness for short.

OK or NG

OK	▶	Replace intake door motor.
NG	▶	Repair harness or connector.

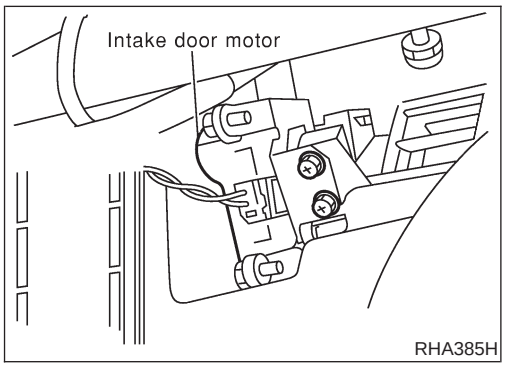

CONTROL LINKAGE ADJUSTMENT

NFHA0093

Intake Door Motor

NFHA0093S04

1. Install intake door motor on blower and intake unit. Ensure that the intake door motor lever is fitted into the slit portion of intake door link.
2. Connect the intake door motor harness connector.
3. Turn ignition switch to ON.
4. Check that intake door operates properly when RECIRCULATION switch is turned ON and OFF.

Blower Motor

TROUBLE DIAGNOSIS PROCEDURE FOR BLOWER MOTOR

=NFHA0138

Symptom:

- **Blower motor does not rotate at all.**

Inspection Flow

1. Confirm symptom by performing the following operational check.

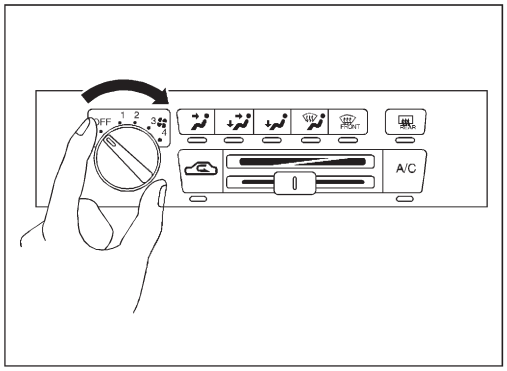

OPERATIONAL CHECK – Blower motor

1) Turn fan control dial to 1-speed.
   Blower should operate on 1-speed.
2) Then turn fan control dial to 2-speed.
3) Continue checking blower speed until all four speeds are checked.
4) Leave blower on 4-speed.

If OK (symptom cannot be duplicated), perform complete operational check (*2).
If NG (symptom is confirmed), continue with STEP-2 following.

2. Check for any service bulletins.

3. Check blower motor circuit. (*1)

OK

If the symptom still exist, perform a complete operational check (*2) and check for other symptoms.
[Refer to symptom table, (*3).]
Does another symptom exist?

Yes → Go to Trouble Diagnosis for related symptom.
[Another symptom exists.]

← INSPECTION END

RHA437HA

*1: HA-172 *2: HA-155 *3: HA-154

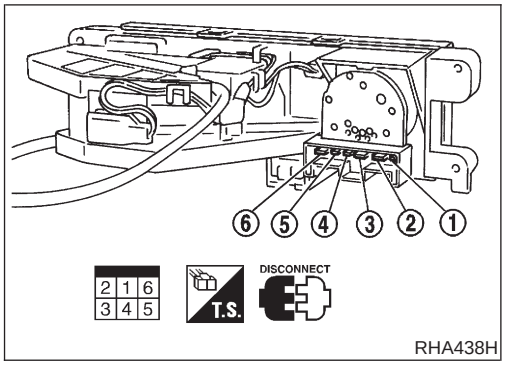

RHA438H

ELECTRICAL COMPONENTS INSPECTION

=NFHA0139

Fan Switch

NFHA0139S01

Check continuity between terminals at each switch position.

SWITCH POSITION	Continuity between terminals
OFF	No continuity
1	2 — 1 — 6
2	3 — 1 — 6
3	4 — 1 — 6
4	5 — 1 — 6

Blower Motor

NFHA0139S02

Confirm smooth rotation of the blower motor.

- Ensure that there are no foreign particles inside the intake unit.

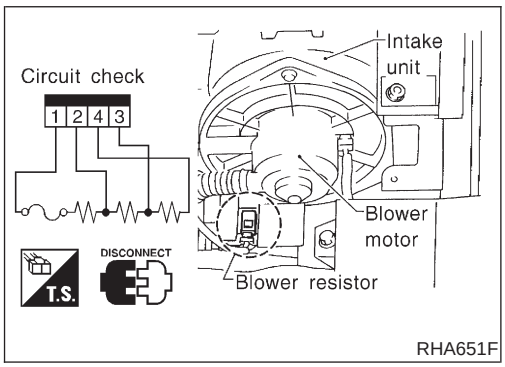

RHA651F

Blower Resistor

NFHA0139S03

Check resistance between terminals.

Terminal No.		Resistance	
(+)	(−)	RHD models	LHD models
3	1	Approx. 1.29 - 1.57Ω	Approx. 0.9 - 1.1Ω
4		Approx. 2.7 - 3.3Ω	Approx. 2.57 - 3.14Ω
2		Approx. 0.45 - 0.56Ω	Approx. 0.36 - 0.44Ω

DIAGNOSTIC PROCEDURE

=NFHA0089

SYMPTOM:

- **Blower motor does not rotate.**

Test group No.	INCIDENT
1	Fan fails to rotate.
2	Fan does not rotate at 1-speed.
3	Fan does not rotate at 2-speed.
4	Fan does not rotate at 3-speed.
5	Fan does not rotate at 4-speed.

1	**DIAGNOSTIC PROCEDURE**	
Check if blower motor rotates properly at each fan speed. Conduct checks as per table at above.		
1	▶	GO TO 2.
2, 3, 4	▶	GO TO 8.
5	▶	GO TO 9.

2	**CHECK POWER SUPPLY FOR BLOWER MOTOR**	
1. Disconnect blower motor harness connector. 2. Do approx. 12 volts exist between blower motor harness terminal No. 1 and body ground?		

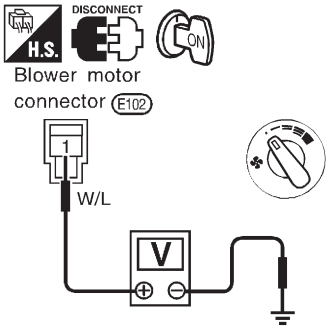

RHA343FC

Yes or No

Yes	▶	GO TO 3.
No	▶	Check 15A (No. 51 and No. 52) fuses at fuse block. Refer to ***EL-10***, "Wiring Diagram — POWER —". Check blower relay.

3	CHECK CIRCUIT CONTINUITY FOR BLOWER MOTOR

1. Turn fan control switch to any position except OFF.
2. Check circuit continuity between blower motor harness terminal No. 2 and body ground.

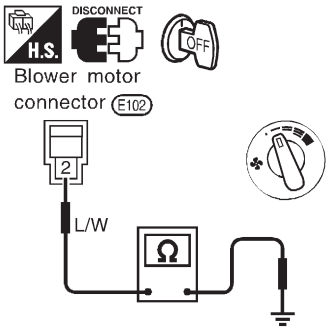

RHA344FC

Continuity should exist.
If OK, check harness for short.

OK or NG

OK	▶	GO TO 4.
NG	▶	Reconnect blower motor harness connector. GO TO 5.

4	CHECK BLOWER MOTOR

(Refer to Electrical Components Inspection.)
(HA-171)

OK or NG

OK	▶	INSPECTION END
NG	▶	Replace blower motor.

5	CHECK BLOWER MOTOR CIRCUIT BETWEEN BLOWER MOTOR AND RESISTOR

Do approx. 12 volts exist between resistor harness terminal No. 1 and body ground?

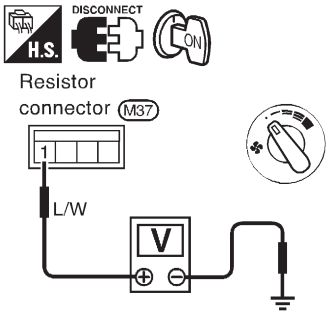

RHA575FB

Yes or No

Yes	▶	Disconnect fan switch harness connector. GO TO 7.
No	▶	Disconnect blower motor and resistor harness connectors. GO TO 6.

6	CHECK CIRCUIT CONTINUITY BETWEEN BLOWER MOTOR AND RESISTOR

Check circuit continuity between blower motor harness terminal No. 2 and resistor harness terminal No. 1.

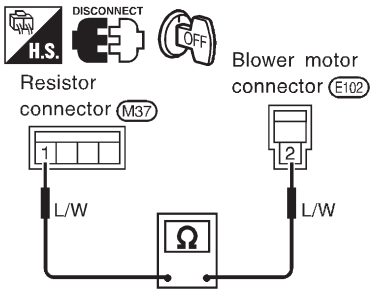

RHA576FB

Continuity should exist.
If OK, check harness for short.

OK or NG

NG	▶	Repair harness or connector.

7	CHECK GROUND CIRCUIT FOR FAN SWITCH

Check circuit continuity between fan switch harness terminal No. 1 and body ground.

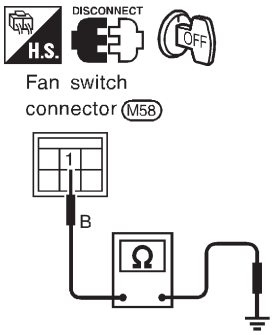

RHA440H

OK or NG

OK	▶	GO TO 8.
NG	▶	Repair harness or connector.

8	CHECK RESISTOR AFTER DISCONNECTING IT

(Refer to Electrical Components Inspection.)
(HA-171)

OK or NG

OK	▶	Reconnect resistor harness connector. GO TO 9.
NG	▶	Replace resistor.

9	CHECK FAN SWITCH CIRCUIT

Do approx. 12 volts exist between each fan switch harness terminal and body ground?

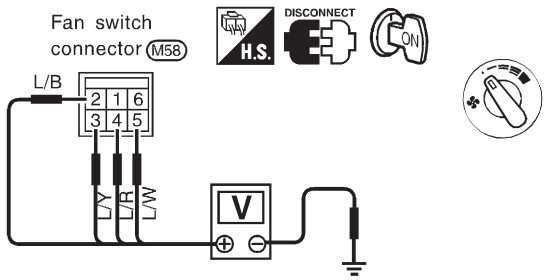

Test group No.	Terminals No. (+)	Terminals No. (–)	Voltage
2	5	Body ground	Approx. 12V
3	4		
4	3		
5	2		

SHA325F

Yes or No

Yes	▶	GO TO 11.
No	▶	GO TO 10.

10	CHECK CIRCUIT CONTINUITY BETWEEN FAN SWITCH AND RESISTOR

Check circuit continuity between fan switch harness terminal and resistor harness terminal.

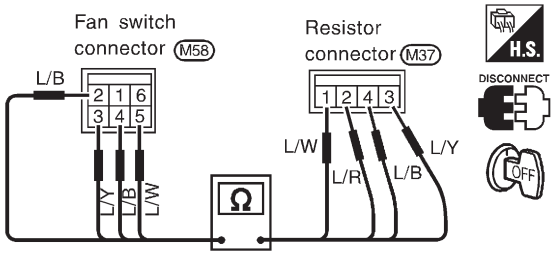

Terminal No. Fan switch	Terminal No. Resistor	Continuity
2	4	Yes
3	3	
4	2	
5	1	

SHA326F

Continuity should exist.
If OK, check harness for short.

OK or NG

NG	▶	Repair harness or connector.

11	CHECK FAN SWITCH AFTER DISCONNECTING IT

(Refer to Electrical Components Inspection.)
(HA-171)

OK or NG

OK	▶	INSPECTION END
NG	▶	Replace fan switch.

Magnet Clutch

TROUBLE DIAGNOSIS PROCEDURE FOR MAGNET CLUTCH

=NFHA0119

Symptom:

- **Magnet clutch does not operate when A/C switch and fan switch are ON.**

Inspection Flow

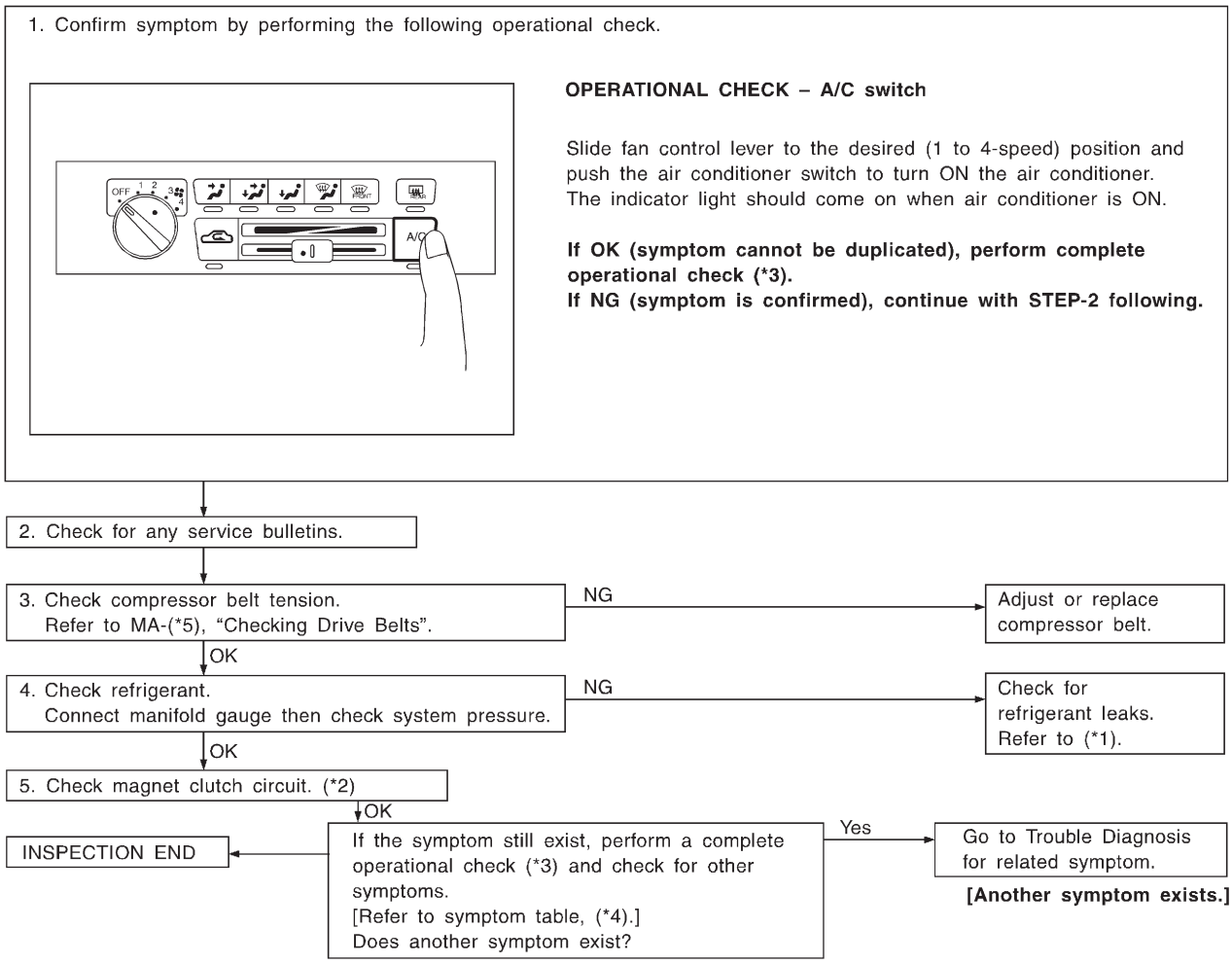

RHA446HA

*1: HA-206
*2: HA-177
*3: HA-155
*4: HA-154
*5: ***MA-15***

DIAGNOSTIC PROCEDURE

=NFHA0091

SYMPTOM:

- **Magnet clutch does not engage when A/C switch and fan switch are ON.**

1	CHECK POWER SUPPLY FOR COMPRESSOR

Disconnect compressor harness connector.
Do approx. 12 volts exist between compressor harness terminal No. 1 and body ground?

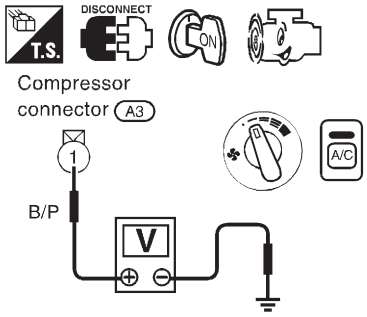

RHA747FH

Yes or No

Yes	▶	GO TO 2.
No	▶	Disconnect A/C relay. GO TO 3.

2	CHECK MAGNET CLUTCH COIL

OK or NG

NG	▶	Replace magnet clutch. Refer to HA-198.

3	CHECK CIRCUIT CONTINUITY BETWEEN A/C RELAY AND COMPRESSOR

Check circuit continuity between A/C relay harness terminal No. 3 and compressor harness terminal No. 1.

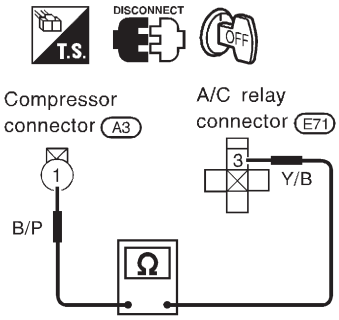

RHA447H

Continuity should exist.
If OK, check harness for short.

OK or NG

OK	▶	GO TO 4.
NG	▶	Repair harness or connector.

4	CHECK POWER SUPPLY FOR A/C RELAY

Disconnect A/C relay.
Do approx. 12 volts exist between A/C relay harness terminal Nos. 1, 5 and body ground?

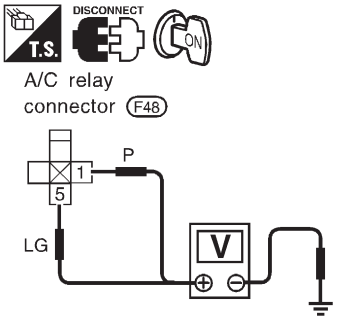

RHA439HA

Yes or No

Yes	▶	GO TO 5.
No	▶	Check power supply circuit and 10A (No. 19, 66) fuse at fuse block. Refer to ***EL-10***, "Wiring Diagram — POWER —".

5	CHECK A/C RELAY AFTER DISCONNECTING IT

Refer to HA-182.

OK or NG

OK	▶	Reconnect A/C relay. GO TO 6.
NG	▶	Replace A/C relay.

6	CHECK COIL SIDE CIRCUIT OF A/C RELAY

Do approx. 12 volts exist between ECM harness terminal No. 27 and body ground?

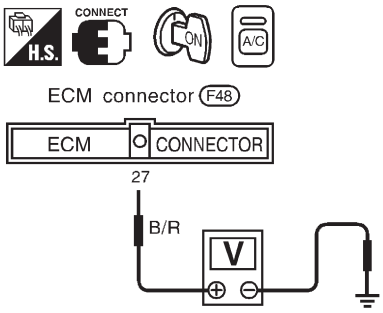

SHA311FA

Yes or No

Yes	▶	GO TO 8.
No	▶	Disconnect A/C relay. Disconnect ECM harness connector. GO TO 7.

7	CHECK CIRCUIT CONTINUITY BETWEEN A/C RELAY AND ECM

Check circuit continuity between A/C relay harness terminal No. 2 and ECM harness terminal No. 27.

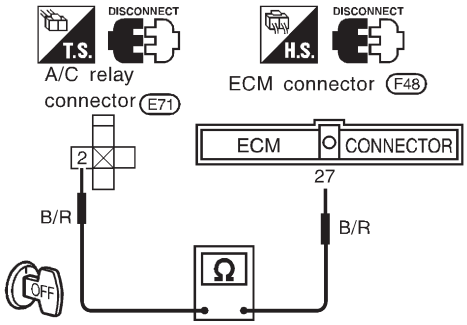

RHA448H

Continuity should exist.

If OK, check harness for short.

OK or NG

NG	▶	Repair harness or connector.

8	CHECK REFRIGERANT PRESSURE SENSOR INPUT SIGNAL

Do approx. 0 volts between ECM harness terminal No. 51 and body ground?

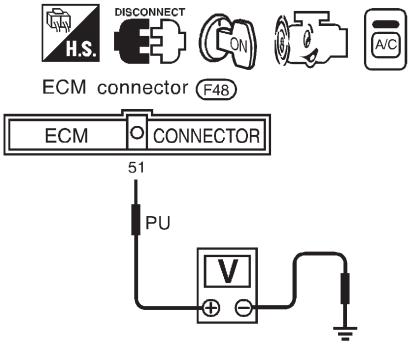

RHA575H

Yes or No

Yes	▶	GO TO 10.
No	▶	Check ECM. Refer to ***EC-119***, "ECM Terminals and Reference Value". Repair harness or connector.

9	CHECK REFRIGERANT PRESSURE SENSOR

Refer to HA-182.

OK or NG

OK	▶	Disconnect A/C switch harness connector. GO TO 10.
NG	▶	Replace refrigerant pressure sensor.

10	CHECK VOLTAGE FOR ECM

Do approx. 12 volts exist between ECM harness terminal No. 45 and body ground?

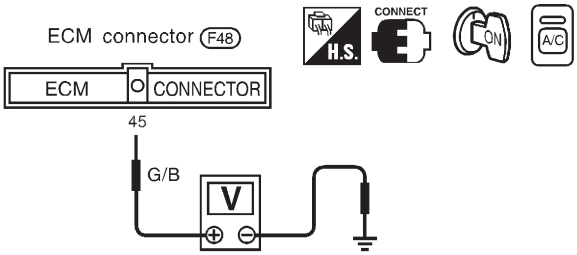

SHA312F

Yes or No

Yes	▶	GO TO 11.
No	▶	Check ECM. Refer to ***EC-119***, "ECM Terminals and Reference Value". Repair harness or connector.

11	CHECK CIRCUIT CONTINUITY BETWEEN A/C CONTROL UNIT AND FAN SWITCH

Check circuit continuity between A/C control unit harness terminal No. 12 and fan switch harness terminal No. 6.

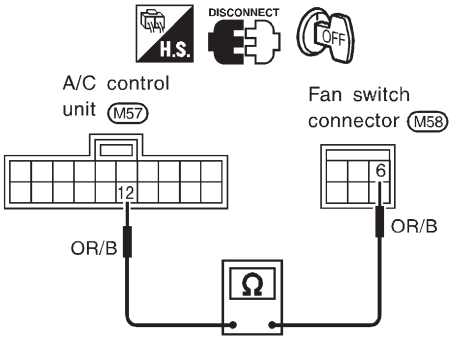

RHA450H

Continuity should exist.
If OK, check harness for short.

OK or NG

OK	▶	GO TO 12.
NG	▶	Repair harness or connector.

12	CHECK BODY GROUND CIRCUIT FOR FAN SWITCH

Does continuity exist between fan switch harness terminal No. 1 and body ground?

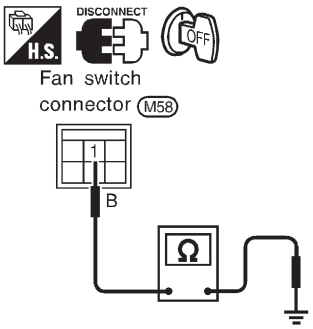

RHA451H

Yes or No

Yes	▶	GO TO 13.
No	▶	Repair harness or connector.

13	CHECK FAN SWITCH

Refer to HA-171.

OK or NG

OK	▶	Replace A/C control unit.
NG	▶	Replace fan switch.

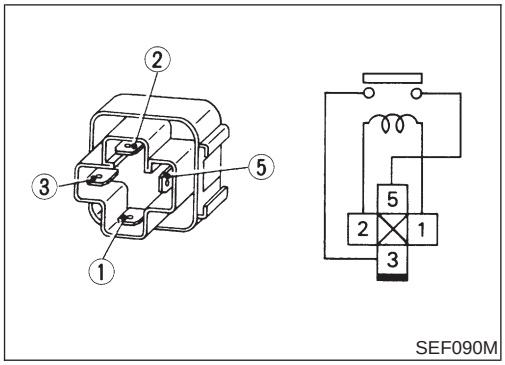

SEF090M

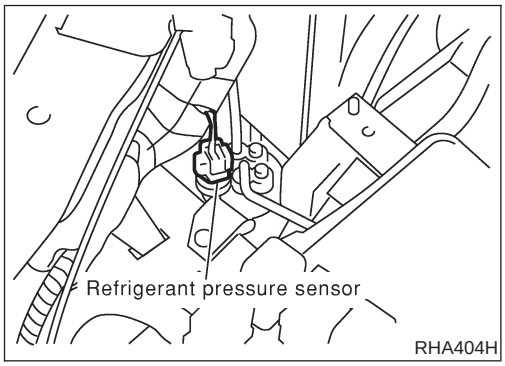

RHA404H

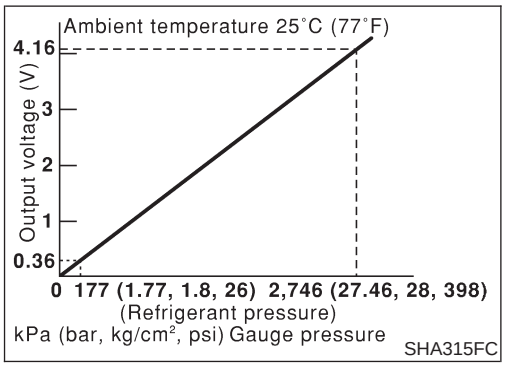

SHA315FC

ELECTRICAL COMPONENTS INSPECTION

=NFHA0092

A/C Relay

NFHA0092S07

Check continuity between terminal Nos. 3 and 5.

Conditions	Continuity
12V direct current supply between terminal Nos. 1 and 2	Yes
No current supply	No

If NG, replace relay.

Refrigerant Pressure Sensor

NFHA0092S08

Make sure that higher A/C refrigerant pressure results in higher refrigerant-pressure sensor output voltage.

	OFF kPa (bar, kg/cm^2, psi)
Low-pressure side	Decreasing to 0.18 (0.0018, 0.00184, 0.03)
High-pressure side	Increasing to 2.74 (0.0274, 0.0279, 0.40)

Insufficient Cooling

TROUBLE DIAGNOSIS PROCEDURE FOR INSUFFICIENT COOLING

=NFHA0150

Symptom:

- **Insufficient Cooling.**

Inspection Flow

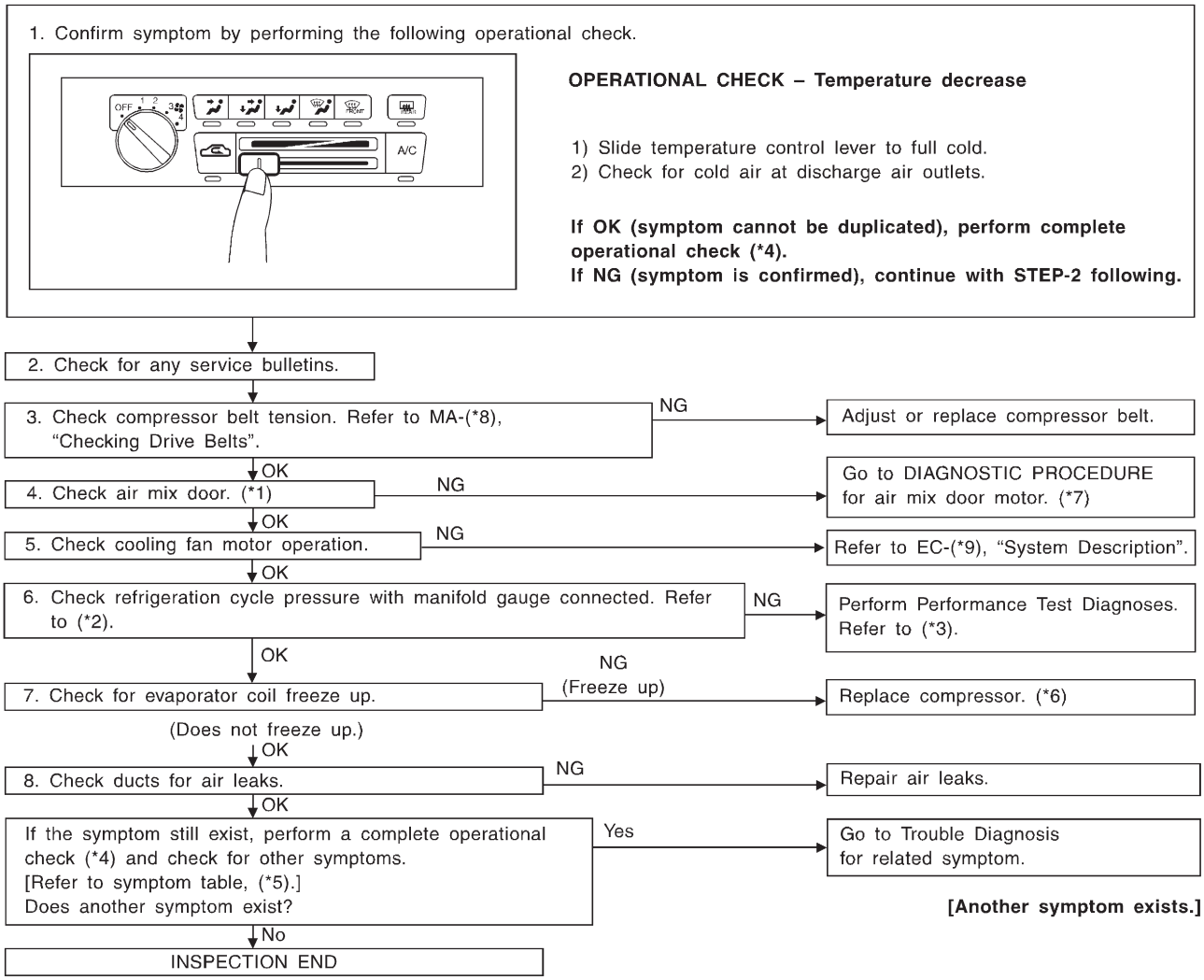

SHA418FA

*1: HA-163	*4: HA-155	*7: HA-163
*2: HA-186	*5: HA-154	*8: ***MA-15***
*3: HA-184	*6: HA-198	*9: ***EC-366***

PERFORMANCE TEST DIAGNOSES

NFHA0082

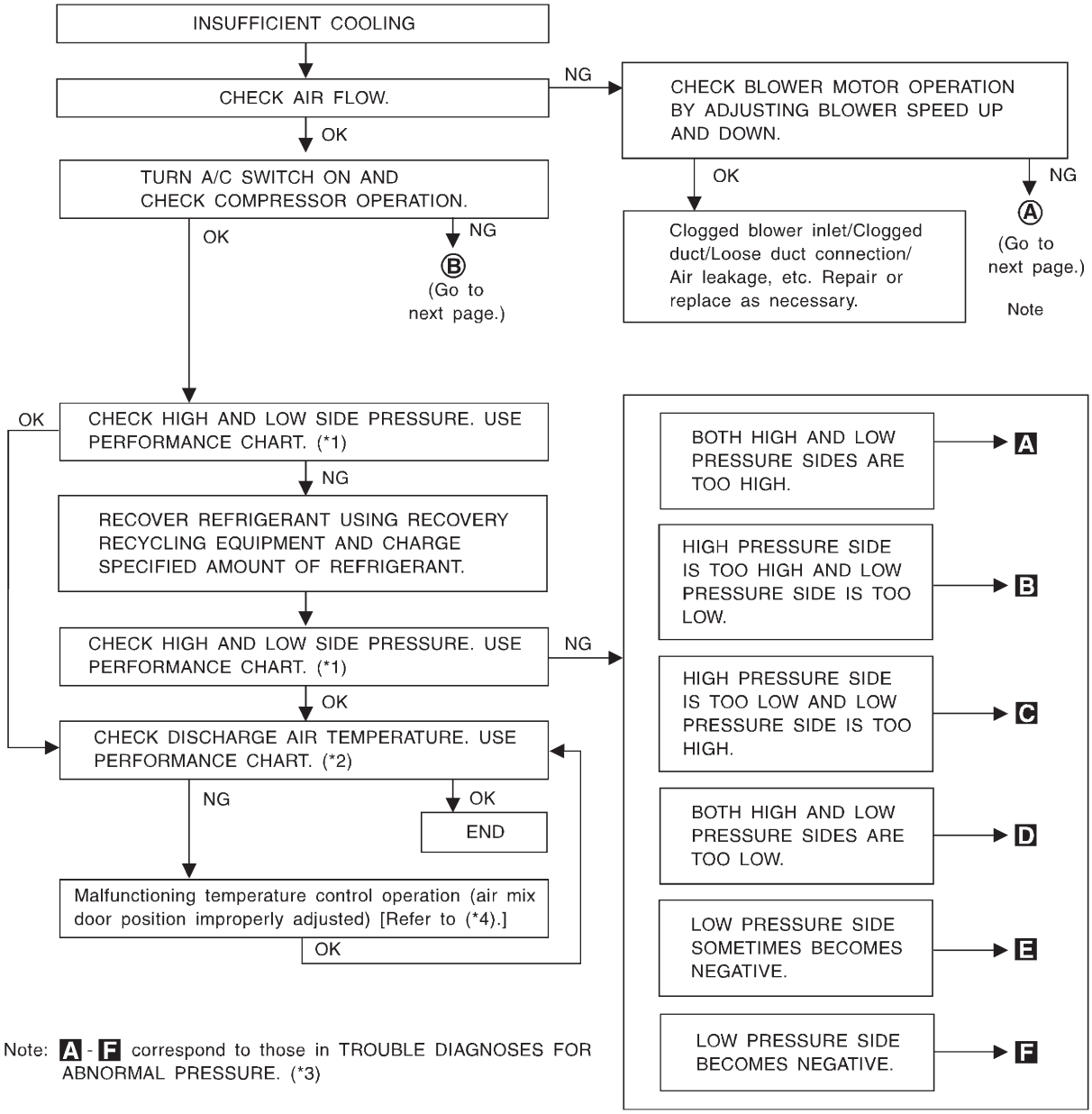

Note: A - F correspond to those in TROUBLE DIAGNOSES FOR ABNORMAL PRESSURE. (*3)

SHA419F

*1: HA-186
*2: HA-186
*3: HA-187
*4: HA-163

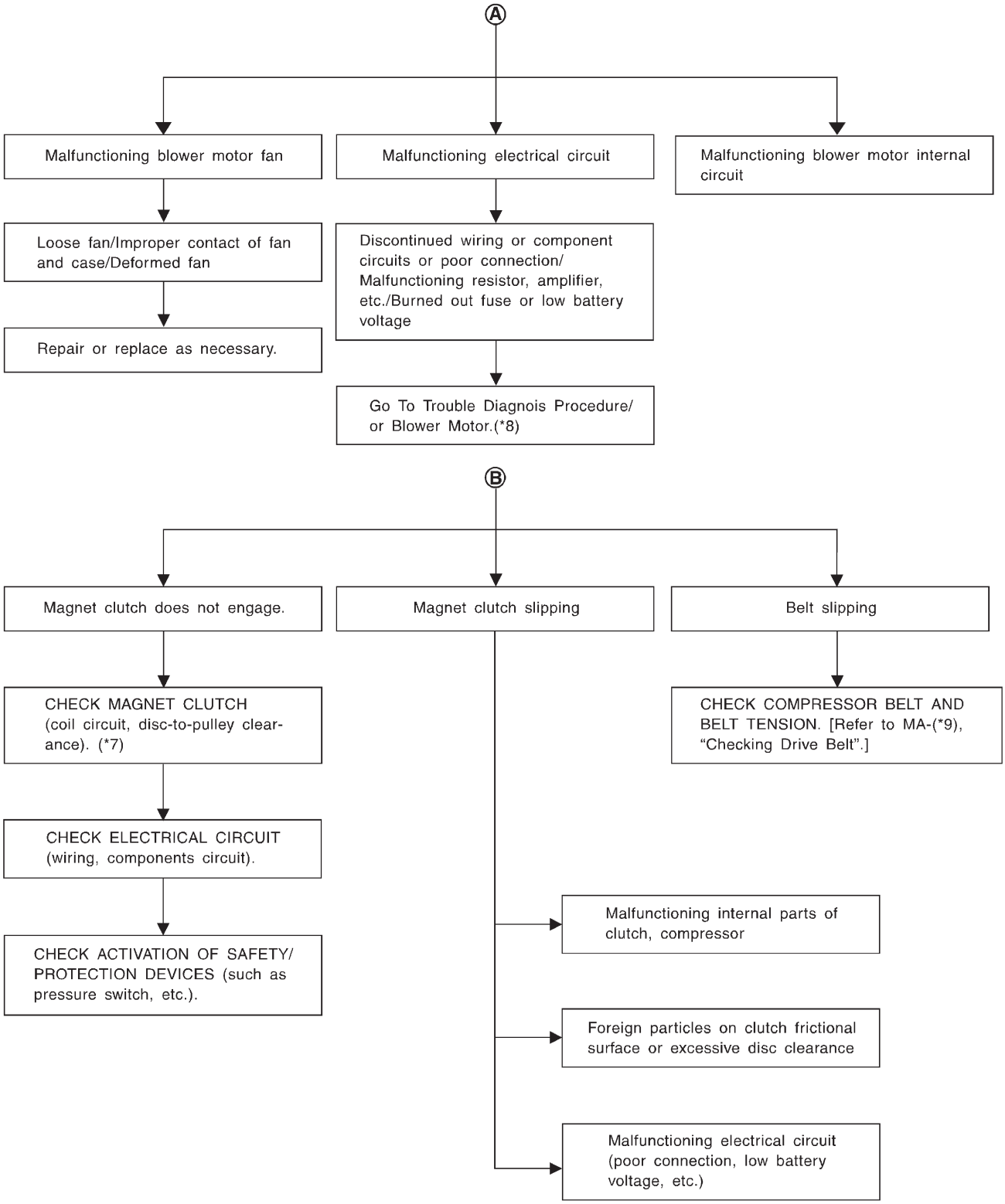

*7: HA-200 *8: HA-170 *9: ***MA-15***

PERFORMANCE TEST

=NFHA0083

Test Condition

NFHA0083S01

Testing must be performed as follows:

Vehicle location	Indoors or in the shade (in a well-ventilated place)
Doors	Closed
Door windows	Open
Hood	Open
TEMP.	Max. COLD
Discharge Air	Face Vent
REC switch	(Recirculation) set
FAN speed	High speed
Engine speed	Idle speed
Operate the air conditioning system for 10 minutes before taking measurements.	

Test Reading

NFHA0083S02

Recirculating-to-discharge Air Temperature Table

NFHA0083S0201

Inside air (Recirculating air) at blower assembly inlet		Discharge air temperature at center ventilator °C (°F)
Relative humidity %	Air temperature °C (°F)	
50 - 60	15 (59)	3.5 - 5.4 (38 - 42)
	20 (68)	6.6 - 8.9 (44 - 48)
	25 (77)	9.5 - 12.6 (49 - 55)
	30 (86)	13.4 - 16.5 (56 - 62)
	35 (95)	17.6 - 21.3 (64 - 70)
60 - 70	15 (59)	5.4 - 7.1 (42 - 45)
	20 (68)	8.9 - 11.0 (48 - 52)
	25 (77)	12.6 - 15.4 (55 - 60)
	30 (86)	16.5 - 20.0 (62 - 68)
	35 (95)	21.3 - 24.8 (70 - 77)

Ambient Air Temperature-to-operating Pressure Table

NFHA0083S0202

Ambient air		High-pressure (Discharge side) kPa (bar, kg/cm^2, psi)	Low-pressure (Suction side) kPa (bar, kg/cm^2, psi)
Relative humidity %	Air temperature °C (°F)		
50 - 70	15 (59)	539 - 657 (5.39 - 6.57, 5.5 - 6.7, 78 - 95)	177 - 216 (1.77 - 2.16, 1.8 - 2.2, 26 - 31)
	20 (68)	677 - 824 (6.77 - 8.24, 6.9 - 8.4, 98 - 119)	167 - 206 (1.67 - 2.06, 1.7 - 2.1, 24 - 30)
	25 (77)	843 - 1,030 (8.43 - 10.30, 8.6 - 10.5, 122 - 149)	177 - 226 (1.77 - 2.26, 1.8 - 2.3, 26 - 33)
	30 (86)	1,030 - 1,275 (10.30 - 12.75, 10.5 - 13.0, 149 - 185)	216 - 255 (2.16 - 2.55, 2.2 - 2.6, 31 - 37)
	35 (95)	1,245 - 1,520 (12.45 - 15.20, 12.7 - 15.5, 181 - 220)	265 - 324 (2.65 - 3.24, 2.7 - 3.3, 38 - 47)

TROUBLE DIAGNOSES FOR ABNORMAL PRESSURE

NFHA0084

Whenever system's high and/or low side pressure is abnormal, diagnose using a manifold gauge. The marker above the gauge scale in the following tables indicates the standard (normal) pressure range. Since the standard (normal) pressure, however, differs from vehicle to vehicle, refer to HA-186 ("Ambient air temperature-to-operating pressure table").

Both High and Low-pressure Sides are Too High.

NFHA0084S01

Gauge indication	Refrigerant cycle	Probable cause	Corrective action
Both high and low-pressure sides are too high. A 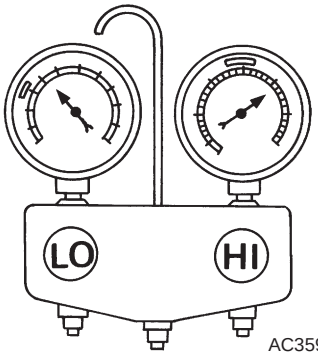 AC359A	● Pressure is reduced soon after water is splashed on condenser.	Excessive refrigerant charge in refrigeration cycle	Reduce refrigerant until specified pressure is obtained.
	Air suction by cooling fan is insufficient.	Insufficient condenser cooling performance ↓ 1. Condenser fins are clogged. 2. Improper fan rotation of cooling fan	● Clean condenser. ● Check and repair cooling fan as necessary.
	● Low-pressure pipe is not cold. ● When compressor is stopped high-pressure value quickly drops by approximately 196 kPa (1.96 bar, 2 kg/cm^2, 28 psi). It then decreases gradually thereafter.	Poor heat exchange in condenser (After compressor operation stops, high pressure decreases too slowly.) ↓ Air in refrigeration cycle	Evacuate repeatedly and recharge system.
	Engine tends to overheat.	Engine cooling systems malfunction.	Check and repair each engine cooling system.
	● An area of the low-pressure pipe is colder than areas near the evaporator outlet. ● Plates are sometimes covered with frost.	● Excessive liquid refrigerant on low-pressure side ● Excessive refrigerant discharge flow ● Expansion valve is open a little compared with the specification. ↓ 1. Improper thermal valve installation 2. Improper expansion valve adjustment	Replace expansion valve.

High-pressure Side is Too High and Low-pressure Side is Too Low.

NFHA0084S02

Gauge indication	Refrigerant cycle	Probable cause	Corrective action
High-pressure side is too high and low-pressure side is too low. B 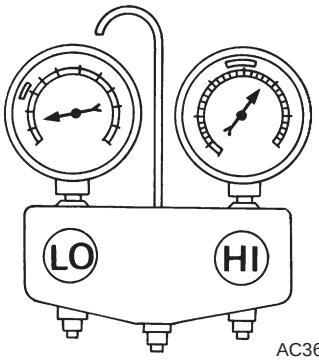 AC360A	Upper side of condenser and high-pressure side are hot, however, liquid tank is not so hot.	High-pressure tube or parts located between compressor and condenser are clogged or crushed.	● Check and repair or replace malfunctioning parts. ● Check lubricant for contamination.

High-pressure Side is Too Low and Low-pressure Side is Too High.

NFHA0084S03

Gauge indication	Refrigerant cycle	Probable cause	Corrective action
High-pressure side is too low and low-pressure side is too high. C 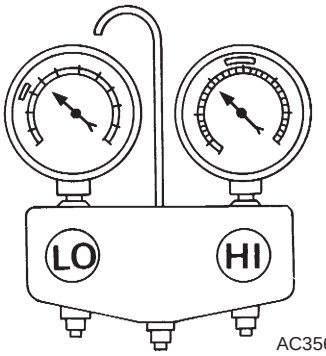 AC356A	High and low-pressure sides become equal soon after compressor operation stops.	Compressor pressure operation is improper. ↓ Damaged inside compressor packings	Replace compressor.
	No temperature difference between high and low-pressure sides	Compressor pressure operation is improper. ↓ Damaged inside compressor packings.	Replace compressor.

Both High- and Low-pressure Sides are Too Low.

NFHA0084S04

Gauge indication	Refrigerant cycle	Probable cause	Corrective action
Both high- and low-pressure sides are too low. D 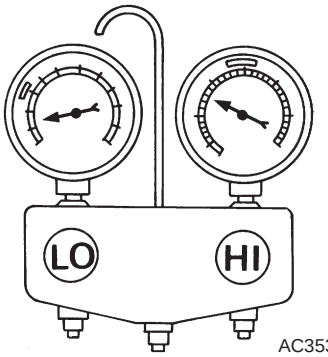 AC353A	● There is a big temperature difference between receiver drier outlet and inlet. Outlet temperature is extremely low. ● Liquid tank inlet and expansion valve are frosted.	Compressor discharge capacity does not change. (Compressor stroke is set at maximum.)	● Replace liquid tank. ● Check lubricant for contamination.
	● Temperature of expansion valve inlet is extremely low as compared with areas near liquid tank. ● Expansion valve inlet may be frosted. ● Temperature difference occurs somewhere in high- pressure side	High-pressure pipe located between receiver drier and expansion valve is clogged.	● Check and repair malfunctioning parts. ● Check lubricant for contamination.
	● Expansion valve and liquid tank are warm or only cool when touched.	Low refrigerant charge ↓ Leaking fittings or components	Check refrigerant for leaks. Refer to "Checking Refrigerant Leaks", HA-206.
	There is a big temperature difference between expansion valve inlet and outlet while the valve itself is frosted.	Expansion valve closes a little compared with the specification. ↓ 1. Improper expansion valve adjustment 2. Malfunctioning thermal valve 3. Outlet and inlet may be clogged.	● Remove foreign particles by using compressed air. ● Check lubricant for contamination.
	An area of the low-pressure pipe is colder than areas near the evaporator outlet.	Low-pressure pipe is clogged or crushed.	● Check and repair malfunctioning parts. ● Check lubricant for contamination.
	Air flow volume is not enough or is too low.	Evaporator is frozen. ↓ Compressor discharge capacity does not change. (Compressor stroke is set at maximum length.)	Replace compressor.

Low-pressure Side Sometimes Becomes Negative.

NFHA0084S05

Gauge indication	Refrigerant cycle	Probable cause	Corrective action
Low-pressure side sometimes becomes negative. E 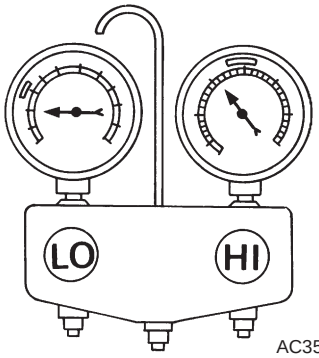 AC354A	● Air conditioning system does not function and does not cyclically cool the compartment air. ● The system constantly functions for a certain period of time after compressor is stopped and restarted.	Refrigerant does not discharge cyclically. ↓ Moisture is frozen at expansion valve outlet and inlet. ↓ Water is mixed with refrigerant.	● Drain water from refrigerant or replace refrigerant. ● Replace liquid tank.

Low-pressure Side Becomes Negative.

NFHA0084S06

Gauge indication	Refrigerant cycle	Probable cause	Corrective action
Low-pressure side becomes negative. F 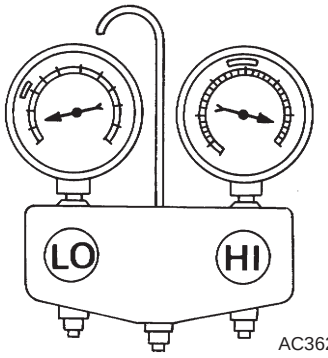 AC362A	Liquid tank or front/rear side of expansion valve's pipe is frosted or dewed.	High-pressure side is closed and refrigerant does not flow. ↓ Expansion valve or liquid tank is frosted.	Leave the system at rest until no frost is present. Start it again to check whether or not the problem is caused by water or foreign particles. ● If water is the cause, initially cooling is okay. Then the water freezes causing a blockage. Drain water from refrigerant or replace refrigerant. ● If due to foreign particles, remove expansion valve and remove particles with dry and compressed air (not shop air). ● If either of the above methods cannot correct the problem, replace expansion valve. ● Replace liquid tank. ● Check lubricant for contamination.

Insufficient Heating

TROUBLE DIAGNOSIS PROCEDURE FOR INSUFFICIENT HEATING

=NFHA0140

Symptom:

- **Insufficient Heating.**

Inspection Flow

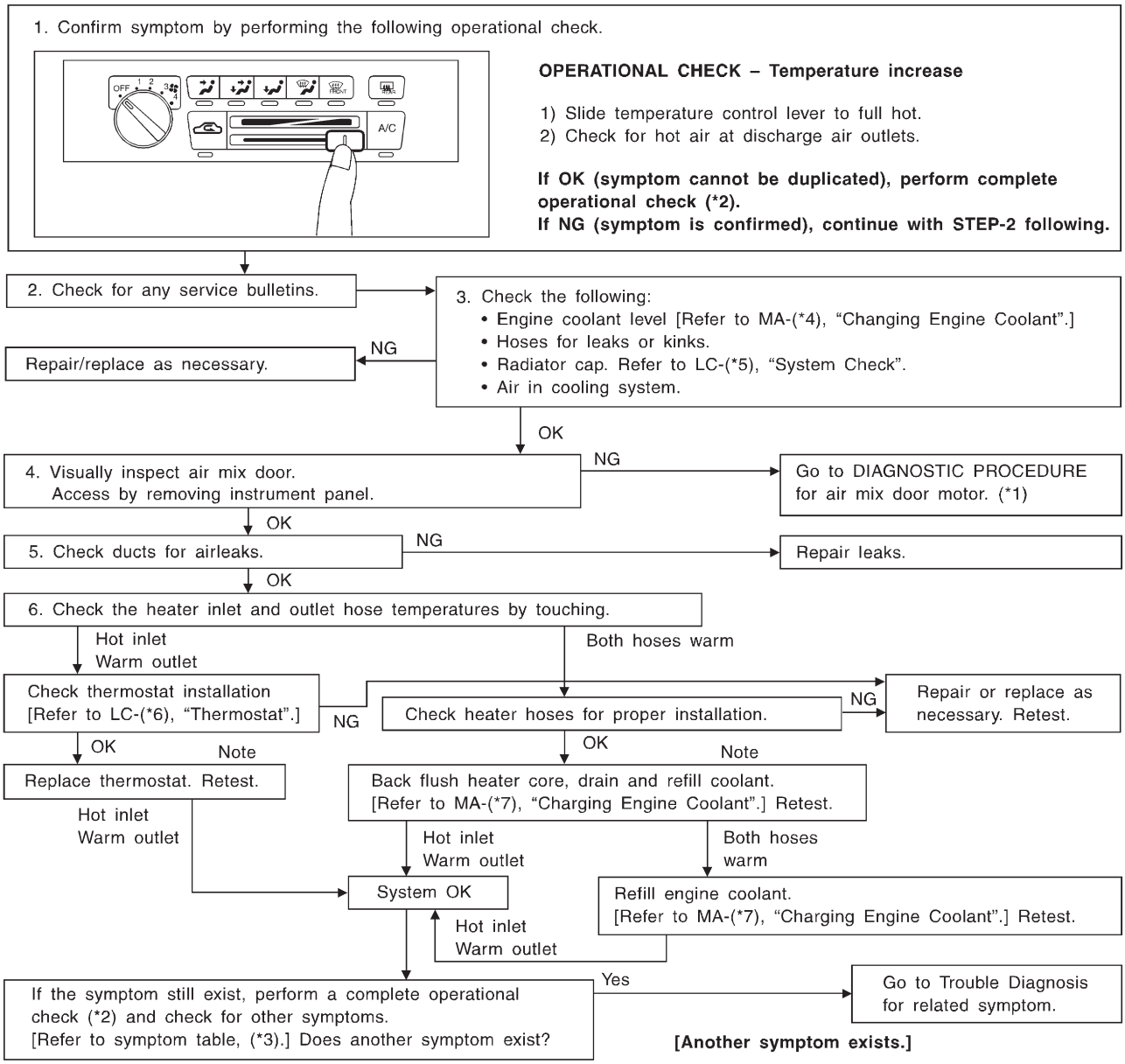

RHA444HA

*1: HA-163
*2: HA-155
*3: HA-154
*4: ***MA-16***
*5: ***LC-11***
*6: ***LC-16***
*7: ***MA-16***

Noise

TROUBLE DIAGNOSIS PROCEDURE FOR NOISE

=NFHA0080

Symptom:

- **Noise**

Inspection Flow

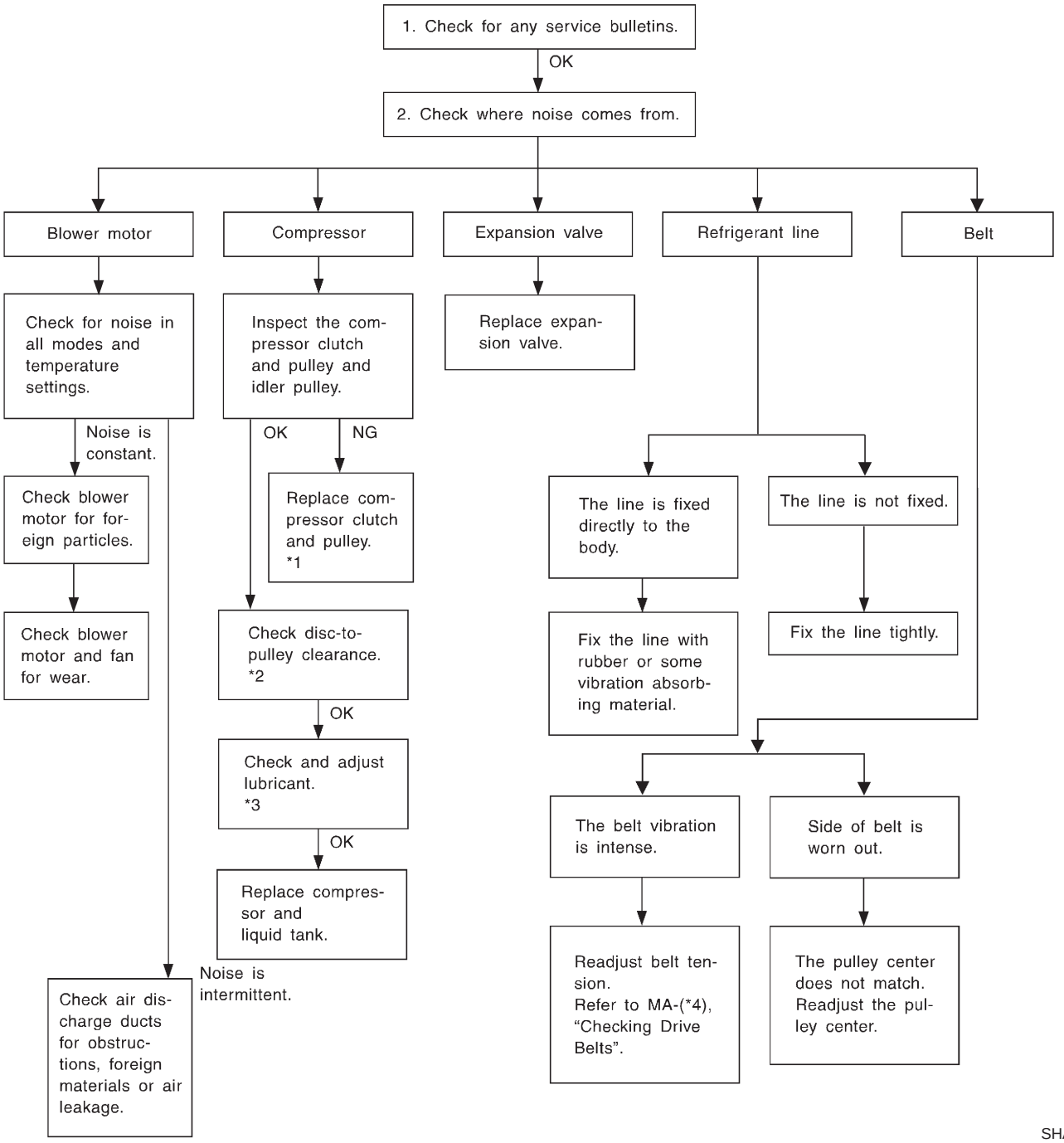

SHA336F

*1: HA-200
*2: HA-200
*3: HA-195
*4: ***MA-15***

HFC-134a (R-134a) Service Procedure

NFHA0094

SETTING OF SERVICE TOOLS AND EQUIPMENT

NFHA0094S01

Discharging Refrigerant

NFHA0094S0101

WARNING:

Avoid breathing A/C refrigerant and lubricant vapor or mist. Exposure may irritate eyes, nose and throat. Use only approved recovery/recycling equipment to discharge HFC-134a (R-134a) refrigerant. If accidental system discharge occurs, ventilate work area before resuming service. Additional health and safety information may be obtained from refrigerant and lubricant manufacturers.

Example

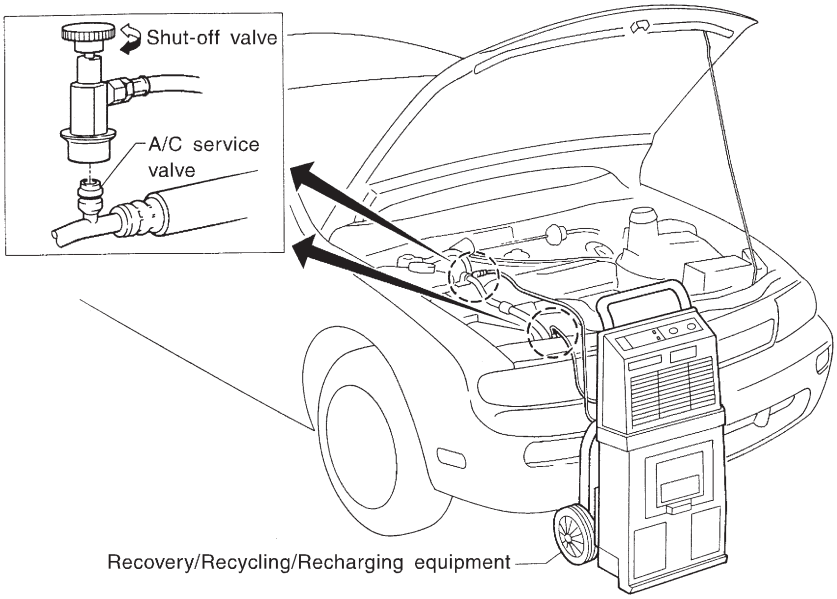

SHA539DE

Evacuating System and Charging Refrigerant

NFHA0094S0102

Example

Preferred (Best) method

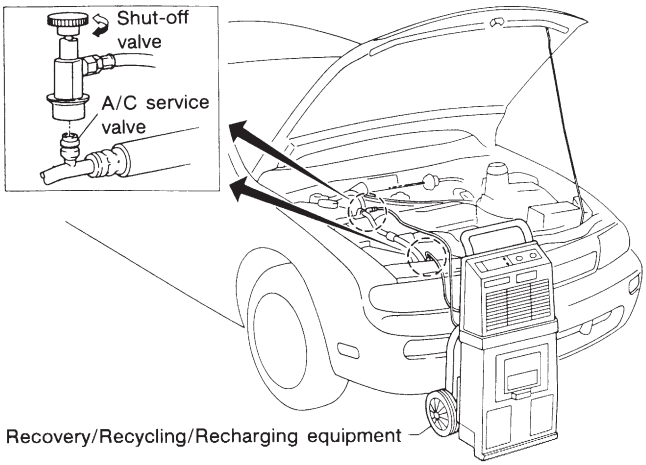

Alternate method

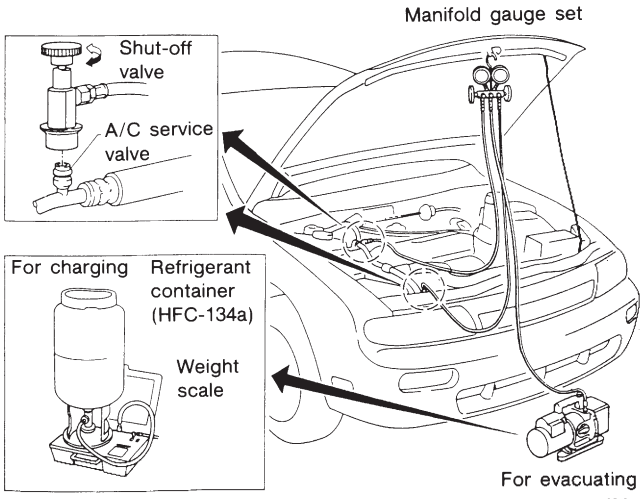

SHA540DC

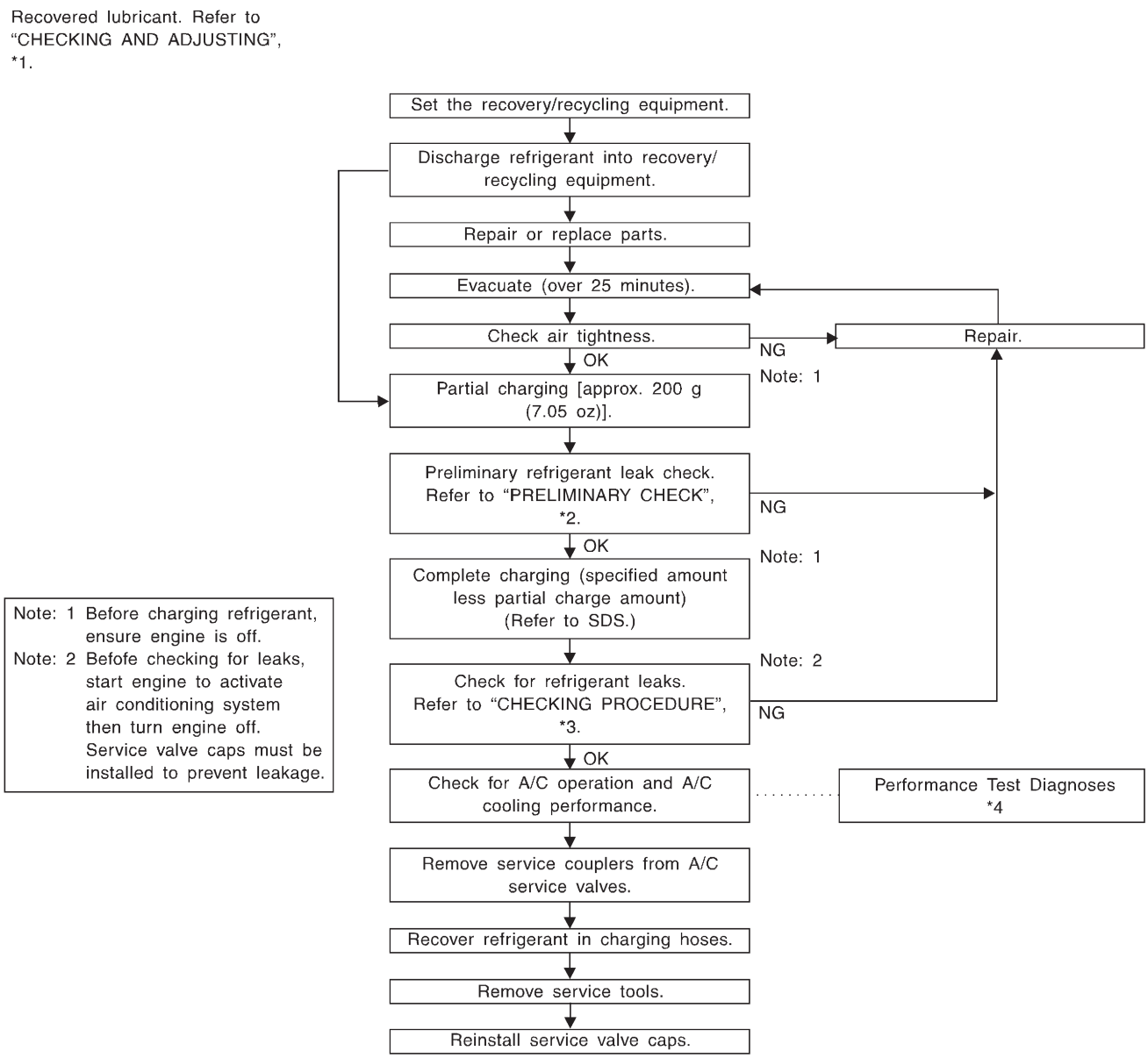

SHA386F

*1: HA-195
*2: HA-206
*3: HA-207
*4: HA-184

Maintenance of Lubricant Quantity in Compressor

NFHA0095

The lubricant in the compressor circulates through the system with the refrigerant. Add lubricant to compressor when replacing any component or after a large gas leakage occurred. It is important to maintain the specified amount. If lubricant quantity is not maintained properly, the following malfunctions may result:

- Lack of lubricant: May lead to a seized compressor
- Excessive lubricant: Inadequate cooling (thermal exchange interference)

LUBRICANT

NFHA0095S01

Name: Nissan A/C System Oil Type S
Part number: KLH00-PAGS0

CHECKING AND ADJUSTING

NFHA0095S02

Adjust the lubricant quantity according to the test group shown below.

1	LUBRICANT RETURN OPERATION	
Can lubricant return operation be performed? ● A/C system works properly. ● There is no evidence of a large amount of lubricant leakage. **Yes or No**		
Yes	▶	GO TO 2.
No	▶	GO TO 3.

2	PERFORM LUBRICANT RETURN OPERATION, PROCEEDING AS FOLLOWS	
1. Start engine, and set the following conditions: **Test condition** **Engine speed: Idling to 1,200 rpm** **A/C or AUTO switch: ON** **Blower speed: Max. position** **Temp. control: Optional [Set so that intake air temperature is 25 to 30°C (77 to 86°F).]** 2. **Next item is for V-6 compressor. Connect the manifold gauge, and check that the high pressure side pressure is 588 kPa (5.9 bar, 6 kg/cm^2, 85 psi) or higher.** **If less than the reference level, attach a cover to the front face of the condenser to raise the pressure.** 3. Perform lubricant return operation for about 10 minutes. 4. Stop engine. **CAUTION:** **If excessive lubricant leakage is noted, do not perform the lubricant return operation.**		
	▶	GO TO 3.

3	CHECK COMPRESSOR	
Should the compressor be replaced? **Yes or No**		
Yes	▶	GO TO HA-196.
No	▶	GO TO 4.

4	CHECK ANY PART	
Is there any part to be replaced? (Evaporator, condenser, liquid tank or in case there is evidence of a large amount of lubricant leakage.)		
	Yes or No	
Yes	▶	GO TO HA-196.
No	▶	Carry out the A/C performance test.

Lubricant Adjusting Procedure for Components Replacement Except Compressor

NFHA0095S0201

After replacing any of the following major components, add the correct amount of lubricant to the system.
Amount of lubricant to be added

Part replaced	Lubricant to be added to system	Remarks
	Amount of lubricant mℓ (Imp fl oz)	
Evaporator	75 (2.6)	—
Condenser	75 (2.6)	—
Liquid tank	5 (0.2)	Add if compressor is not replaced. *1
In case of refrigerant leak	30 (1.1)	Large leak
	—	Small leak *2

*1: If compressor is replaced, addition of lubricant is included in the table.
*2: If refrigerant leak is small, no addition of lubricant is needed.

Lubricant Adjustment Procedure for Compressor Replacement

NFHA0095S0202

1. Discharge refrigerant into the refrigerant recovery/recycling equipment. Measure lubricant discharged into the recovery/recycling equipment.
2. Remove the drain plug of the "old" (removed) compressor. Drain the lubricant into a graduated container and record the amount of drained lubricant.
3. Remove the drain plug and drain the lubricant from the "new" compressor into a separate, clean container.
4. Measure an amount of new lubricant installed equal to amount drained from "old" compressor. Add this lubricant to "new" compressor through the suction port opening.
5. Measure an amount of new lubricant equal to the amount recovered during discharging. Add this lubricant to "new" compressor through the suction port opening.
6. Torque the drain plug.
   V-6 compressor:
   18 - 19 N·m (1.8 - 1.9 kg-m, 13 - 14 ft-lb)
7. If the liquid tank also needs to be replaced, add an additional 5 mℓ (0.2 Imp fl oz) of lubricant at this time.
   Do not add this 5 mℓ (0.2 Imp fl oz) of lubricant if only replacing the compressor.

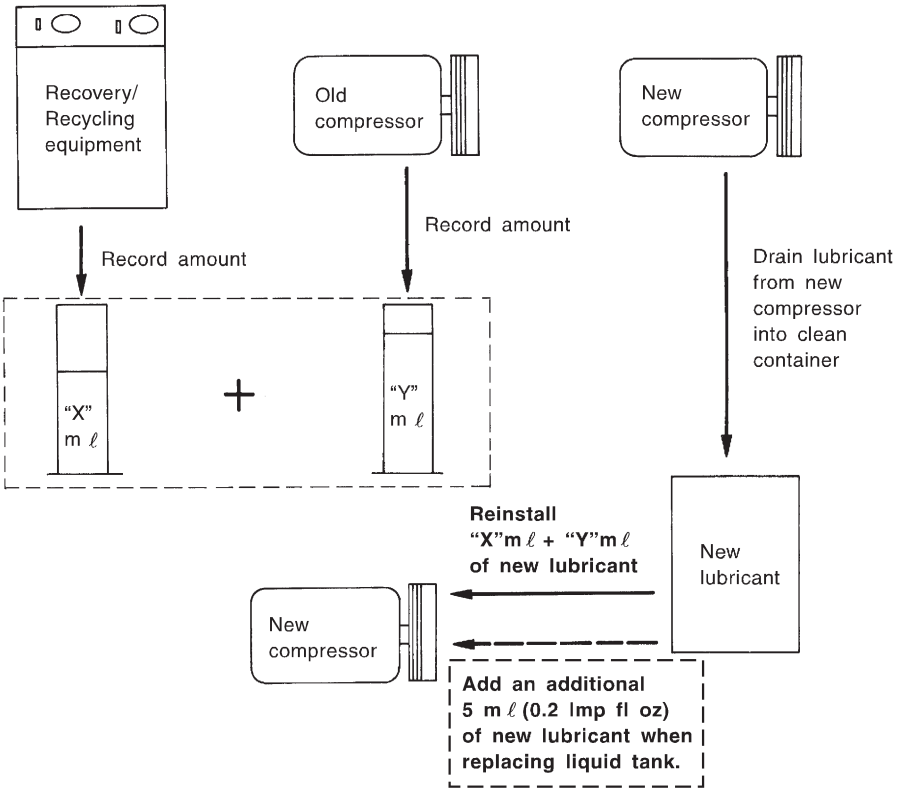
Recovery/
Recycling
equipment
Old
compressor
New
compressor
Record amount
Record amount
Drain lubricant
from new
compressor
into clean
container
"X"
m ℓ
+
"Y"
m ℓ
Reinstall
"X"mℓ + "Y"mℓ
of new lubricant
New
lubricant
New
compressor
Add an additional
5 mℓ (0.2 Imp fl oz)
of new lubricant when
replacing liquid tank.

RHA065DI

Compressor
REMOVAL AND INSTALLATION

NFHA0096

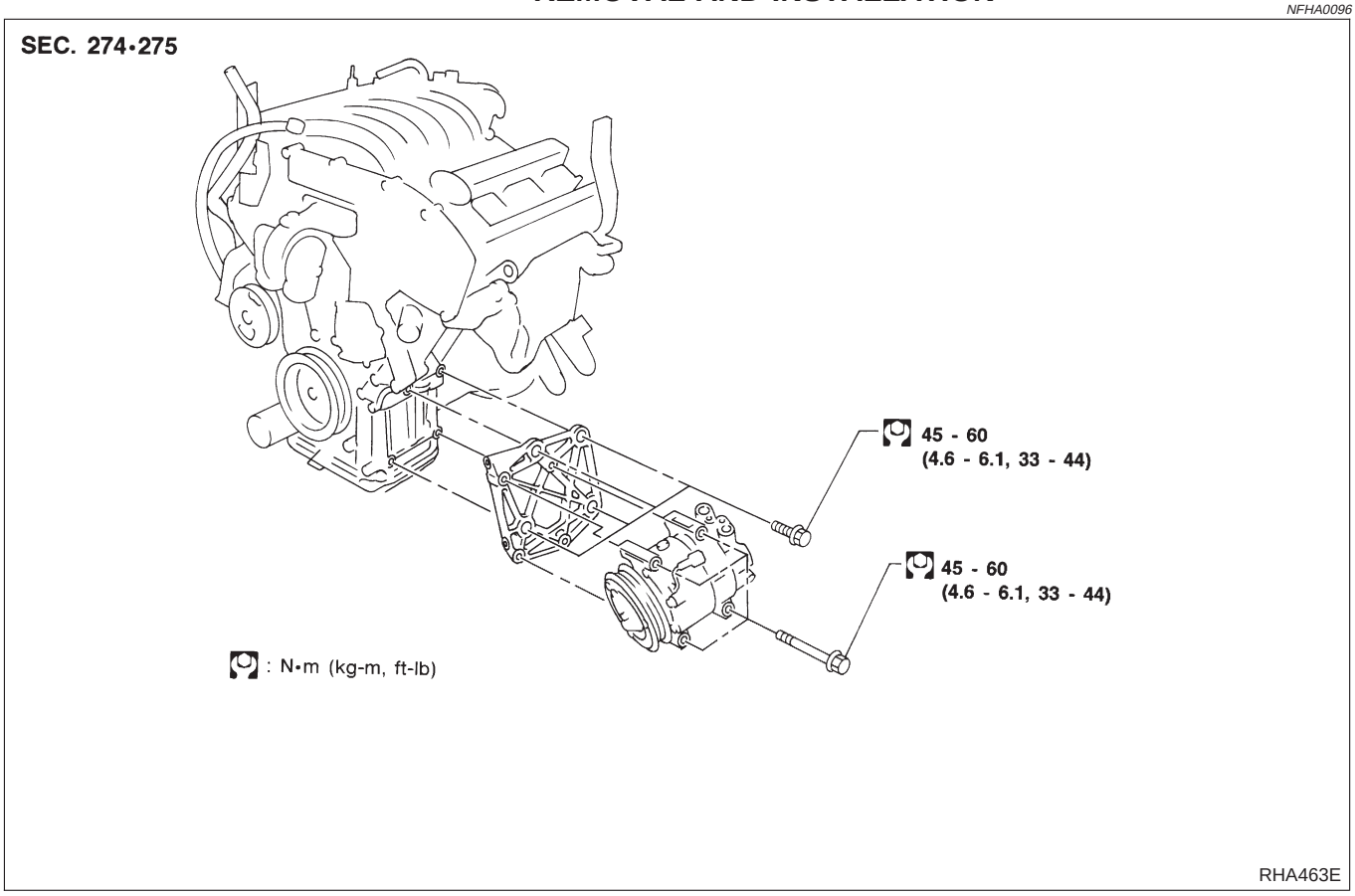

Compressor Clutch
OVERHAUL

NFHA0097

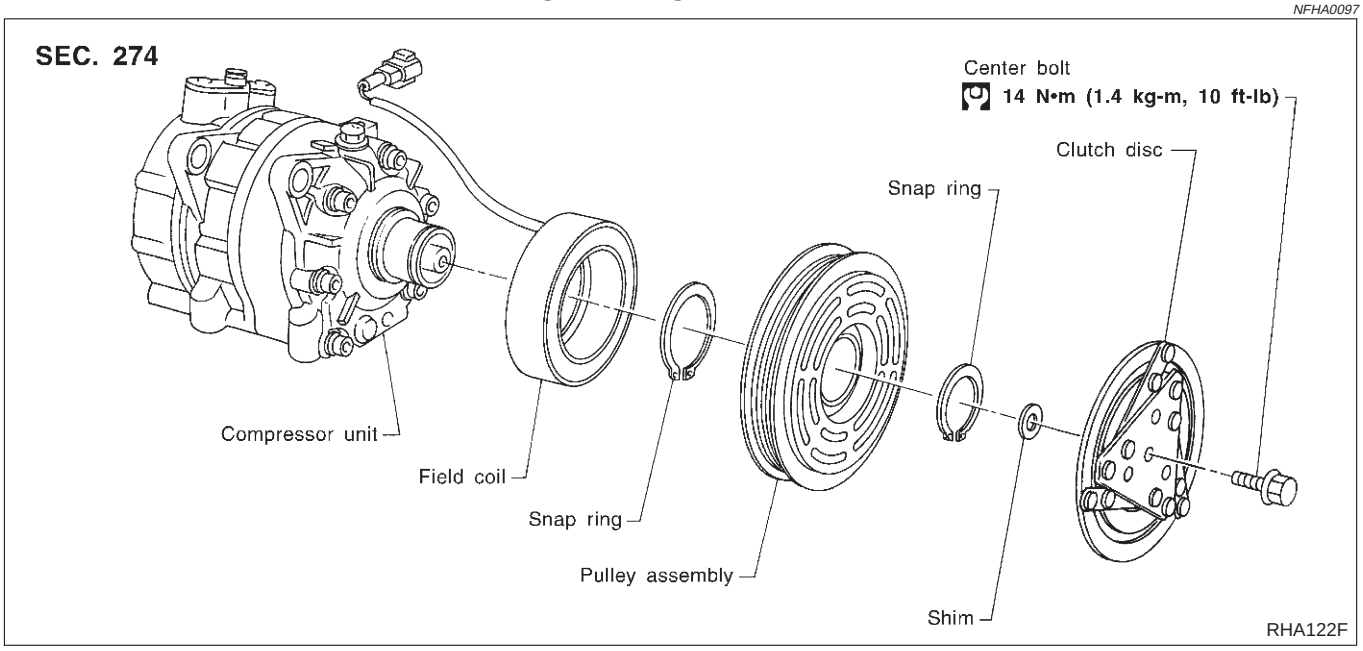

REMOVAL

NFHA0098

- When removing center bolt, hold clutch disc with clutch disc wrench.

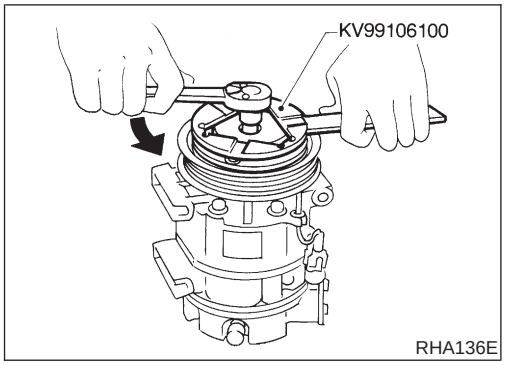

RHA136E

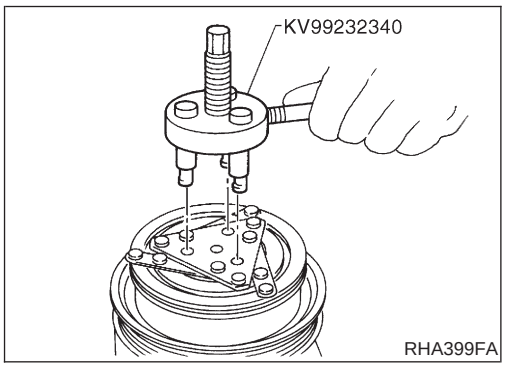

RHA399FA

- Remove the clutch disc using the clutch disc puller.
  Insert the holder's three pins into the holes in the clutch disc. Rotate the holder clockwise to hook it onto the plate. Then, tighten the center bolt to remove the clutch disc.
  After removing the clutch disc, remove the shims from either the drive shaft or the clutch disc.

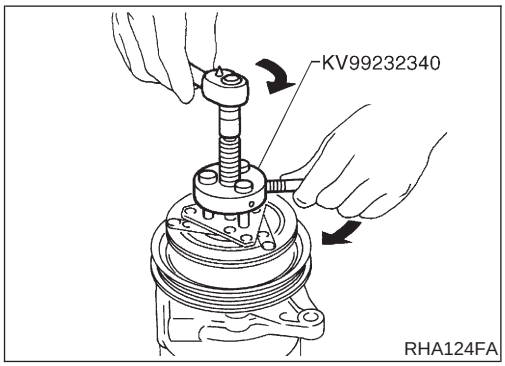

RHA124FA

- Remove the snap ring using external snap ring pliers.

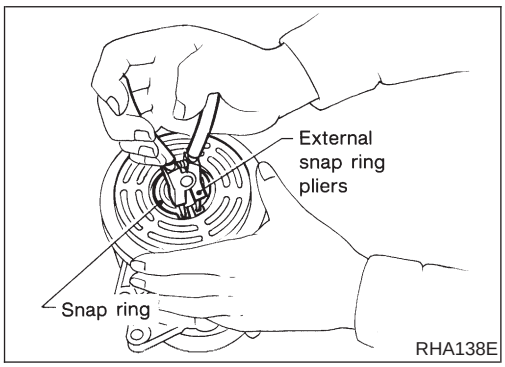

RHA138E

- Pulley removal
  Position the center pulley puller on the end of the drive shaft, and remove the pulley assembly using any commercially available pulley puller.
  To prevent the pulley groove from being deformed, the puller claws should be positioned onto the edge of the pulley assembly.

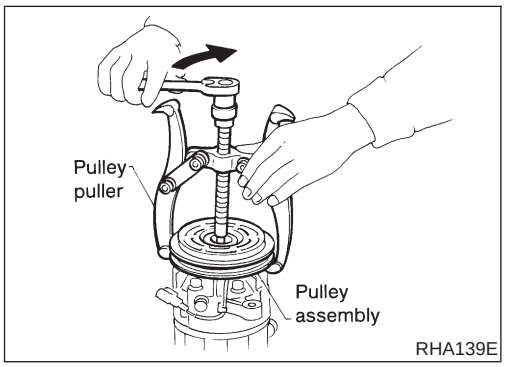

RHA139E

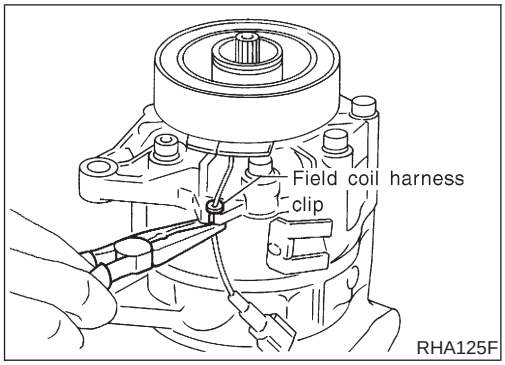

- Remove the field coil harness clip using a pair of pliers.

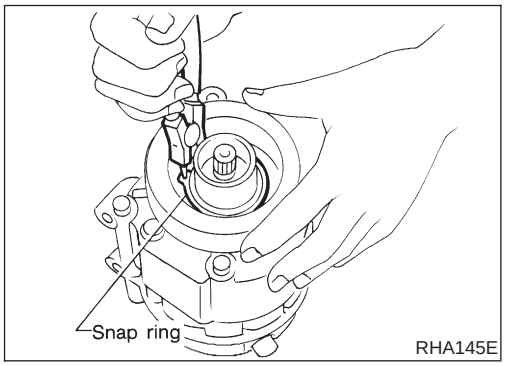

- Remove the snap ring using external snap ring pliers.

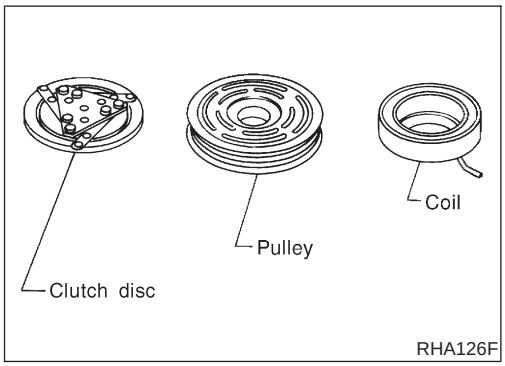

INSPECTION

NFHA0099

Clutch Disc

NFHA0099S01

If the contact surface shows signs of damage due to excessive heat, replace clutch disc and pulley.

Pulley

NFHA0099S02

Check the appearance of the pulley assembly. If the contact surface of pulley shows signs of excessive grooving, replace clutch disc and pulley. The contact surfaces of the pulley assembly should be cleaned with a suitable solvent before reinstallation.

Coil

NFHA0099S03

Check coil for loose connection or cracked insulation.

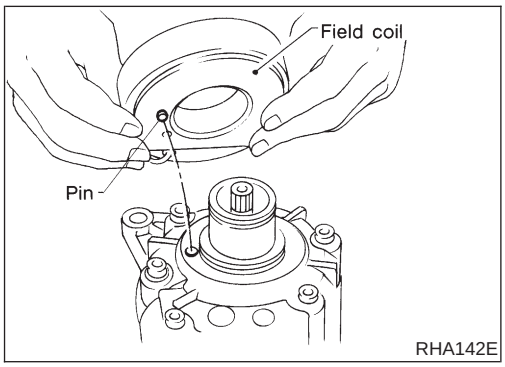

INSTALLATION

NFHA0100

- Install the field coil.
  Be sure to align the coil's pin with the hole in the compressor's front head.
- Install the field coil harness clip using a screwdriver.

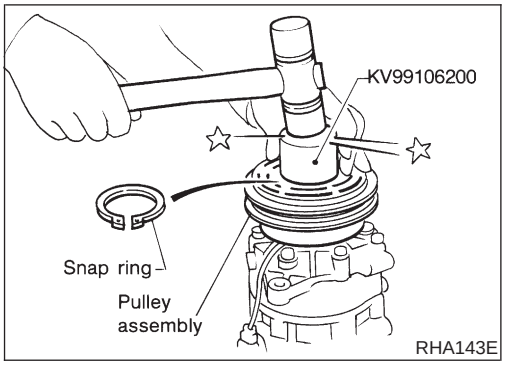

- Install the pulley assembly using the installer and a hand press, and then install the snap ring using snap ring pliers.

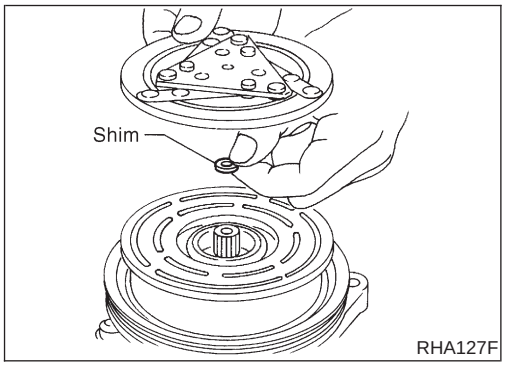

- Install the clutch disc on the drive shaft, together with the original shim(s). Press the clutch disc down by hand.

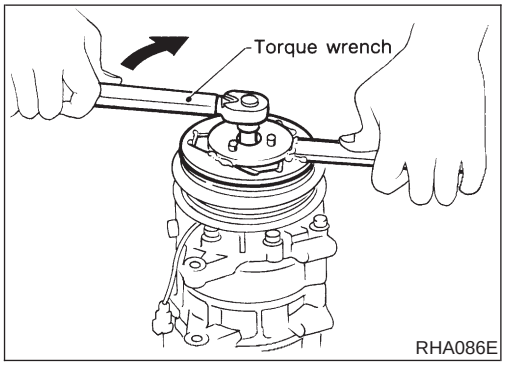

- Using the holder to prevent clutch disc rotation, tighten the bolt to 14 N·m (1.4 kg-m, 10 ft-lb) torque.
  After tightening the bolt, check that the pulley rotates smoothly.

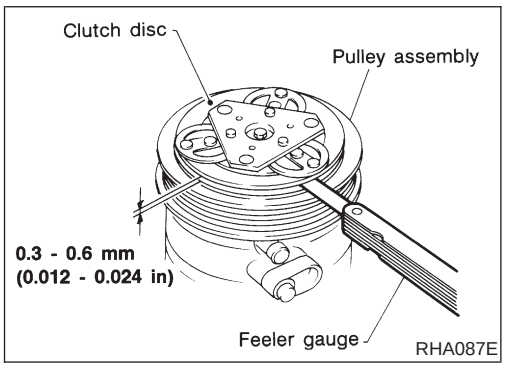

- Check clearance around the entire periphery of clutch disc.
  Disc-to-pulley clearance:
  0.3 - 0.6 mm (0.012 - 0.024 in)
  If the specified clearance is not obtained, replace adjusting spacer and readjust.

Break-in Operation

NFHA0100S01

When replacing compressor clutch assembly, always carry out the break-in operation. This is done by engaging and disengaging the clutch about thirty times. Break-in operation raises the level of transmitted torque.

Heater Unit (Heater Core)

REMOVAL

NFHA0261

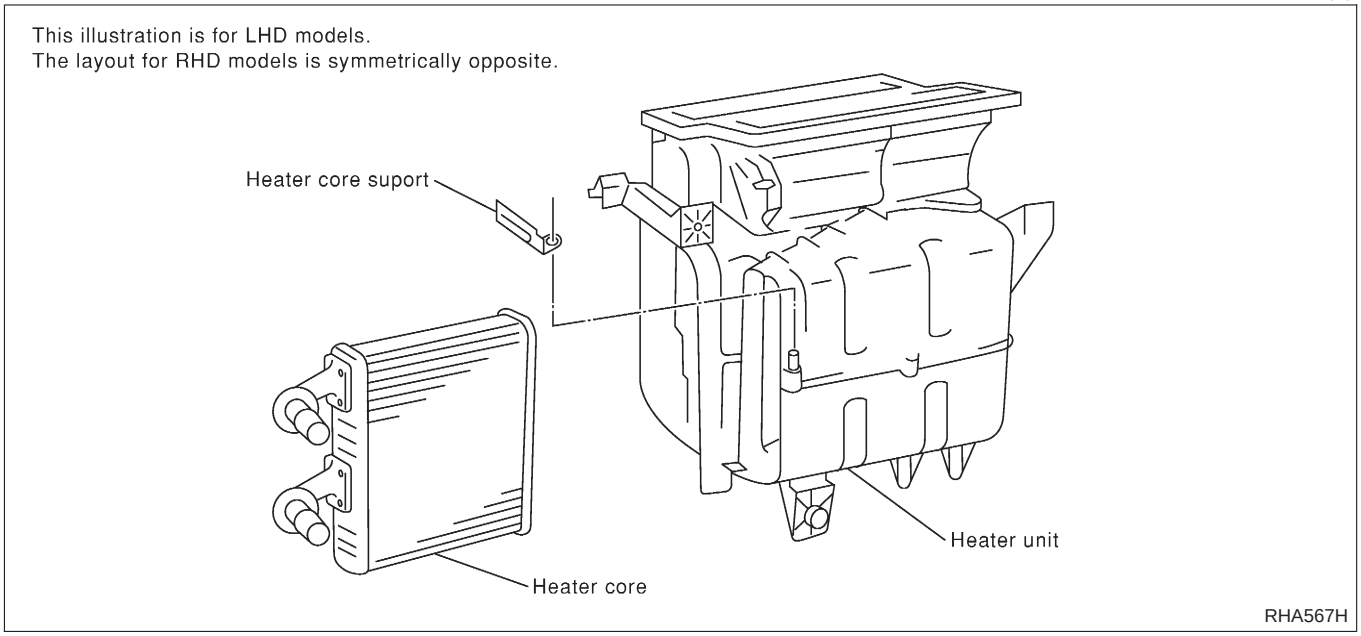

1. Drain the cooling system. Refer to ***MA-16***, “Changing Engine Coolant”.
2. Discharge the A/C system. Refer to HA-108.
3. Disconnect the two heater hoses from inside the engine compartment.
4. Remove the blower and cooling unit. Refer to HA-203.
5. Remove the steering member assembly. Refer to ***BT-20***, “Removal and Installation - Instrument Panel Assembly”.
6. Remove the heater unit.
7. Remove the heater core.

INSTALLATION

NFHA0262

Installation is basically the reverse order of removal.

When filling radiator with coolant, refer to *MA-16*, “Changing Engine Coolant”.

Recharge the A/C system. Refer to HA-108.

Blower and Cooling Unit (A/C Evaporator)

REMOVAL

NFHA0263

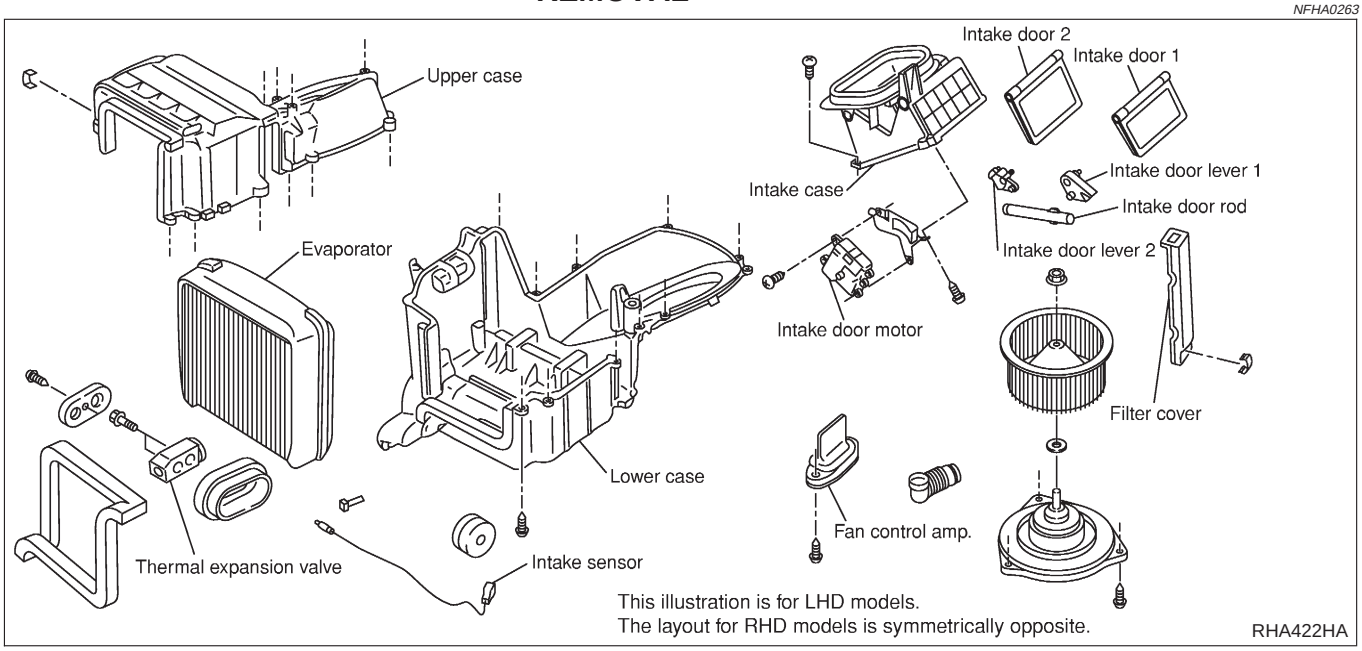

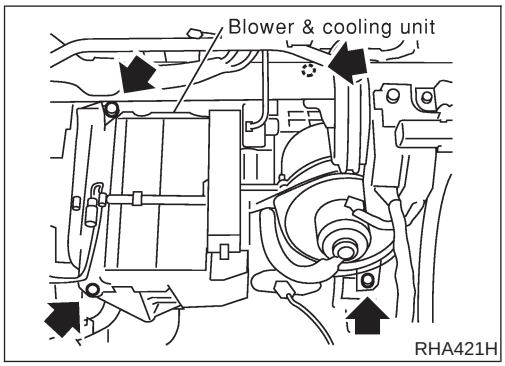

1. Discharge the A/C system. Refer to HA-193.
2. Disconnect the two refrigerant lines from the engine compartment.
   Cap the A/C lines to prevent moisture from entering the system.
3. Remove the glove box and mating trim. Refer to ***BT-20***, “Removal and Installation - Instrument Panel Assembly”.
4. Disconnect the thermal amp. connector.
5. Disconnect the fan resistor and blower motor connector.
6. Remove the blower and cooling unit.
7. Separate the blower and cooling unit case, and remove the evaporator.

INSTALLATION

NFHA0264

Installation is basically the reverse order of removal.
Recharge the A/C system. Refer to HA-193.

Refrigerant Lines

REMOVAL AND INSTALLATION

=NFHA0101

- Refer to page HA-127 regarding “Precautions for Refrigerant Connection”.

LHD models

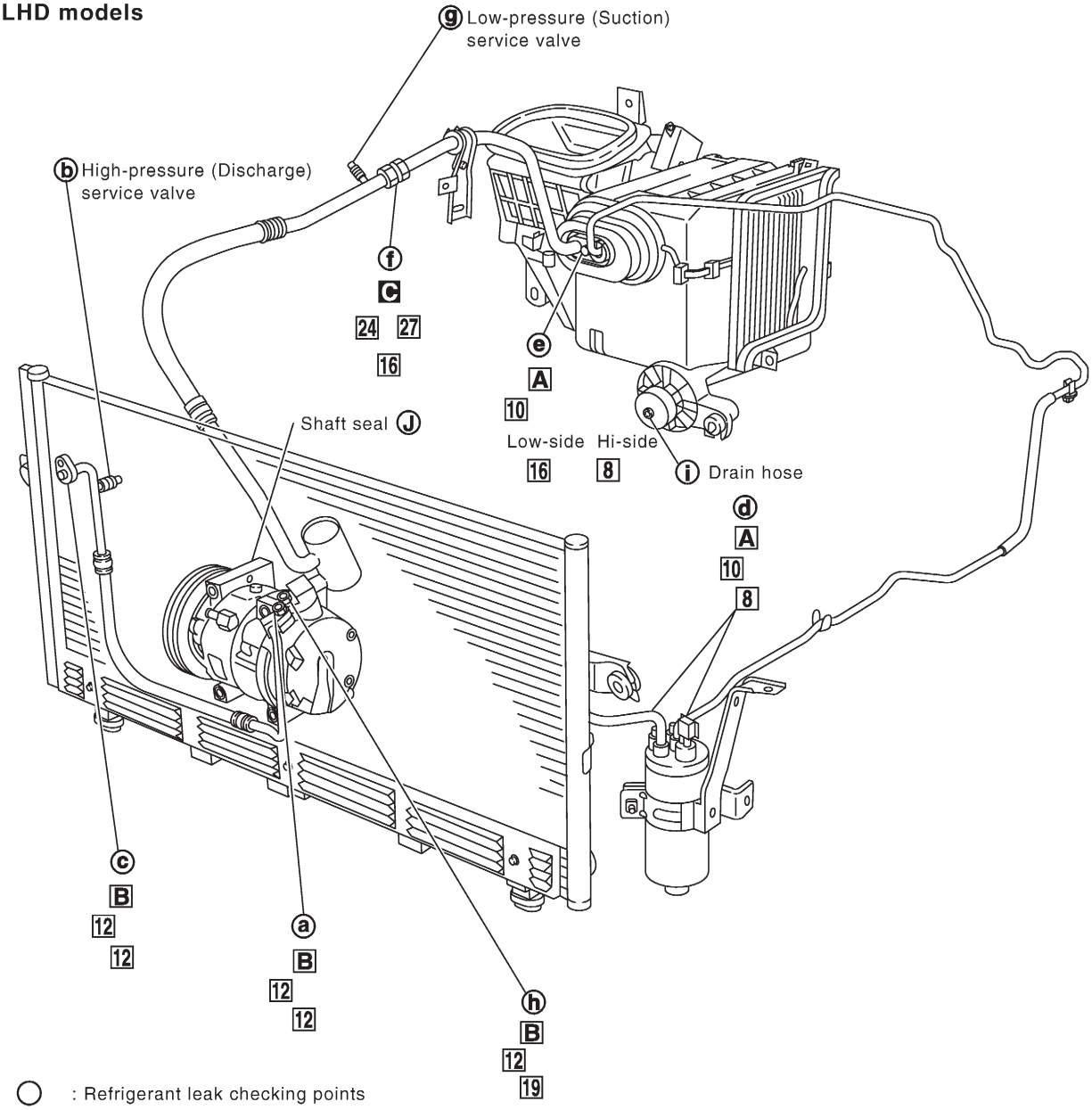

○ : Refrigerant leak checking points
□ : (Tightening torque)
□□ : (Wrench size)
□ : (O-ring size)
: N•m (kg-m, in-lb)
: N•m (kg-m, ft-lb)
A : 2.9 - 5.9 (0.29 - 0.61, 26 - 52)
B : 7.8 - 19.6 (0.78 - 2.00, 68 - 173)
C : 15 - 24 (1.5 - 2.4, 11 - 18)

RHA423HB

RHD models

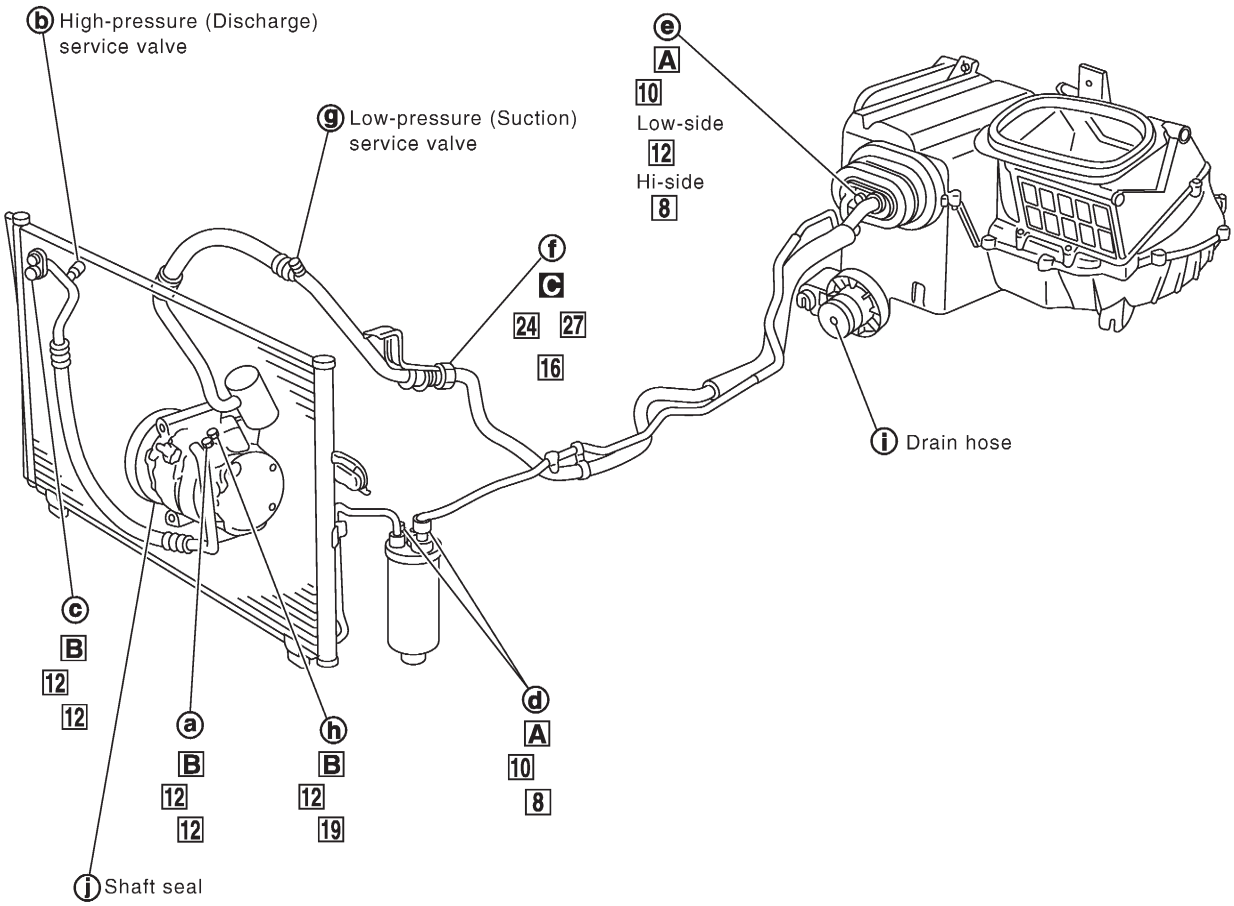

○ : Refrigerant leak checking points

□ : (Tightening torque)

□ □ : (Wrench size)

□ : (O-ring size)

: N•m (kg-m, in-lb)

A : **2.9 - 5.9 (0.29 - 0.61, 26 - 52)**

B : **7.8 - 19.6 (0.78 - 2.00, 68 - 173)**

: N•m (kg-m, ft-lb)

C : **15 - 24 (1.5 - 2.4, 11 - 18)**

RHA900H

- Refer to HA-127, "Precautions for Refrigerant Connection".

CHECKING REFRIGERANT LEAKS

=NFHA0102

Preliminary Check

NFHA0102S01

Perform a visual inspection of all refrigeration parts, fittings, hoses, and components for signs of A/C lubricant leakage, damage and corrosion. Take note of the areas with A/C lubricant leakage to allow extra time in these areas with electronic leak detector.

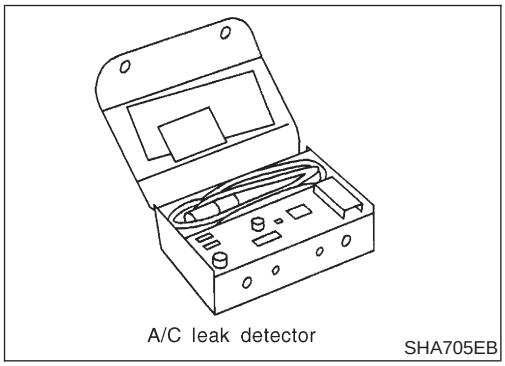

Precautions for Handling Leak Detector

NFHA0102S02

When performing a refrigerant leak check, use an A/C leak detector or equivalent. Ensure that the instrument is calibrated and set properly per the operating instructions.

The leak detector is a delicate device. In order to use the leak detector properly, read the operating instructions and perform any specified maintenance.

Other gases in the work area or substances on the A/C components, for example, anti-freeze, windshield washer fluid, solvents and lubricants, may falsely trigger the leak detector. Make sure the surfaces to be checked are clean. Clean with a dry cloth or blow off with shop air. Do not allow the sensor tip of the detector to contact with any substance. This can also cause false readings and may damage the detector.

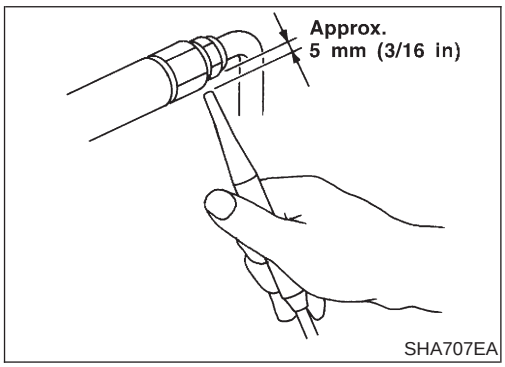

1. Position probe approximately 5 mm (3/16 in) away from point to be checked.

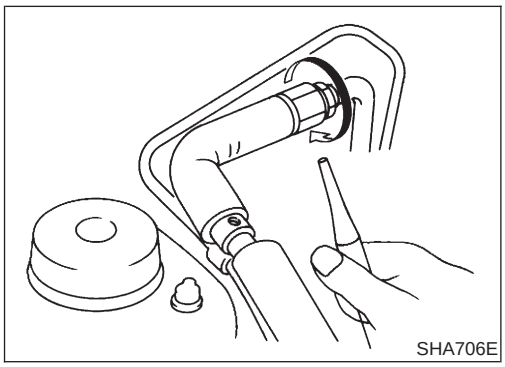

2. When testing, circle each fitting completely with probe.

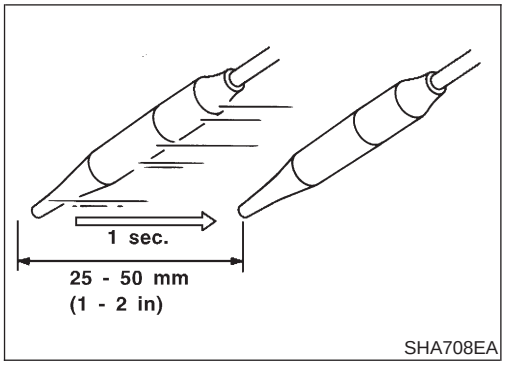

3. Move probe along component approximately 25 to 50 mm (1 to 2 in)/sec.

Checking Procedure

NFHA0102S03

To prevent inaccurate or false readings, make sure there is no refrigerant vapor, shop chemicals, or cigarette smoke in the vicinity of the vehicle. Perform the leak test in calm area (low air/wind movement) so that the leaking refrigerant is not dispersed.

1. Turn engine off.
2. Connect a suitable A/C manifold gauge set to the A/C service ports.
3. Check if the A/C refrigerant pressure is at least 345 kPa (3.45 bar, 3.52 kg/cm^2, 50 psi) above 16°C (61°F). If less than specification, recover/evacuate and recharge the system with the specified amount of refrigerant.

NOTE:
At temperatures below 16°C (61°F), leaks may not be detected since the system may not reach 345 kPa (3.45 bar, 3.52 kg/cm^2, 50 psi).

4. Conduct the leak test from the high side (compressor discharge **a** to evaporator inlet **e**) to the low side (evaporator discharge **e** to shaft seal **j**). Refer to HA-204. Perform a leak check for the following areas carefully. Clean the component to be checked and move the leak detector probe completely around the connection/component.

- **Compressor**
  Check the fitting of high and low pressure hoses, relief valve and shaft seal.
- **Liquid tank**
  Check the refrigerant pressure sensor, tube fitting, weld seams and the fusible plug mount.
- **Service valves**
  Check all around the service valves. Ensure service valve caps are secured on the service valves (to prevent leaks).

NOTE:
After removing A/C manifold gauge set from service valves, wipe any residue from valves to prevent any false readings by leak detector.

- **Cooling unit (Evaporator)**
  With engine OFF, turn blower fan on "High" for at least 15 seconds to dissipate any refrigerant trace in the cooling unit. Wait a minimum of 10 minutes accumulation time (refer to the manufacturer's recommended procedure for actual wait time) before inserting the leak detector probe into the drain hose. Keep the probe inserted for at least ten seconds. Use caution not to contaminate the ptobe tip with water or dirt that may be in the drain hose.

5. If a leak detector detects a leak, verify at least once by blowing compressed air into area of suspected leak, then repeat check as outlined above.
6. Do not stop when one leak is found. Continue to check for additional leaks at all system components.
   If no leaks are found, perform steps 7 - 10.
7. Start engine.
8. Set the heater A/C control as follows:
1) A/C switch ON.
2) Face mode
3) Recirculation switch ON
4) Max cold temperature
5) Fan speed high
9. Run engine at 1,500 rpm for at least 2 minutes.
10. Turn engine off and perform leak check again following steps 4 through 6 above.

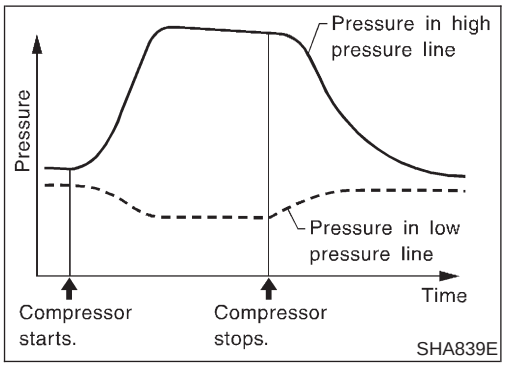

Refrigerant leaks should be checked immediately after stopping the engine. Begin with the leak detector at the compressor. The pressure on the high pressure side will gradually drop after refrigerant circulation stops and pressure on the low pressure side will gradually rise, as shown in the graph. Some leaks are more easily detected when pressure is high.

11. Discharge A/C system using approved refrigerant recovery equipment. Repair the leaking fitting or component as necessary.
12. Evacuate and recharge A/C system and perform the leak test to confirm no refrigerant leaks.
13. Conduct A/C performance test to ensure system works properly.

Belt

TENSION ADJUSTMENT

NFHA0103

- **Refer to *MA-15*, "Checking Drive Belt".**

Idle Air Control Valve (IACV) — Auxiliary Air Control (AAC) Valve

INSPECTION

NFHA0104

- **Refer to *EC-510*, "Description" and HA-141.**

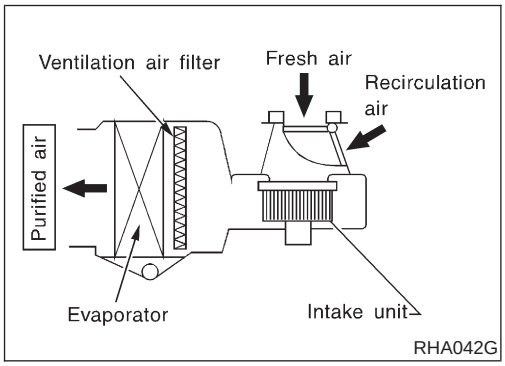

Ventilation Air Filter

FUNCTION

NFHA0268

Air inside passenger compartment is kept clean at either recirculation or fresh mode by installing ventilation air filter into cooling unit.

NOTE:
To replace ventilation air filter, refer to "PERIODIC MAINTENANCE", *MA-7* .
Caution label is fixed inside the glove box.

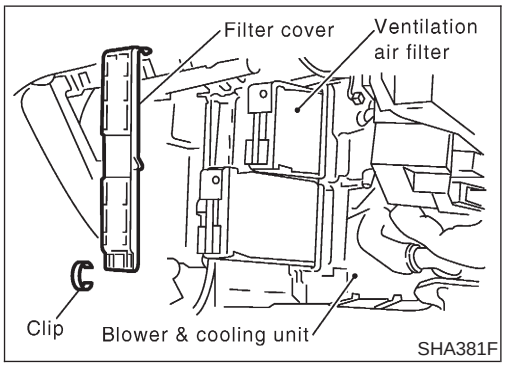

REPLACEMENT PROCEDURE

NFHA0269

1. Remove glove box.
2. Remove instrument lower panel from instrument panel.
3. Remove filter cover fixed clip.
4. Slide the filter cover to the upper side and then remove it.
5. Take out the lower side ventilation air filter from cooling unit.
6. Then slide upper side filter to the bottom position and take off the ventilation air filter from the cooling unit.
7. Replace with new one and reinstall on cooling unit.
8. Reinstall filter cover, clip, instrument lower panel and glove box.

Manual

COMPRESSOR

NFHA0105

Model		CALSONIC make V-6
Type		V-6 variable displacement
Displacement cm^3 (cu in)/rev.	Max.	184 (11.228)
	Min.	14.5 (0.885)
Cylinder bore x stroke mm (in)		37 (1.46) x [2.3 - 28.6 (0.091 - 1.126)]
Direction of rotation		Clockwise (viewed from drive end)
Drive belt		Poly V

LUBRICANT

NFHA0106

Model		CALSONIC make V-6
Name		Nissan A/C System Oil Type S
Part number*		KLH00-PAGS0
Capacity mℓ (Imp fl oz)	Total in system	200 (7.0)
	Compressor (Service part) charging amount	200 (7.0)

*: Always check with Parts Department for the latest parts information.

REFRIGERANT

NFHA0107

Type	HFC-134a (R-134a)
Capacity kg (lb)	0.60 - 0.70 (1.32 - 1.54)

ENGINE IDLING SPEED (WHEN A/C IS ON)

NFHA0108

- Refer to ***EC-510***, “Description”.

BELT TENSION

NFHA0109

- Refer to ***MA-15***, “Checking Drive Belt”.